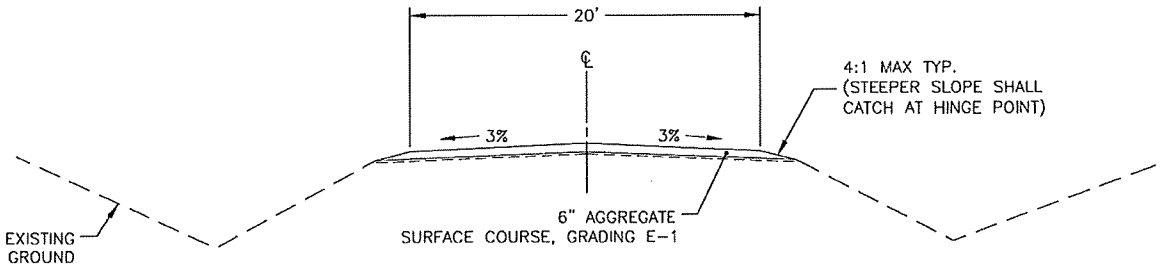

Figure 3: McCarthy Road Typical Section

The proposed typical section for the bridge (see Figure 4) is a two-lane roadway with the following:

- Concrete Surface
- 27 foot total bridge width
- 24 foot traveled way (will taper to road typical section using a 25:1 taper)
- 3% crowned cross slope

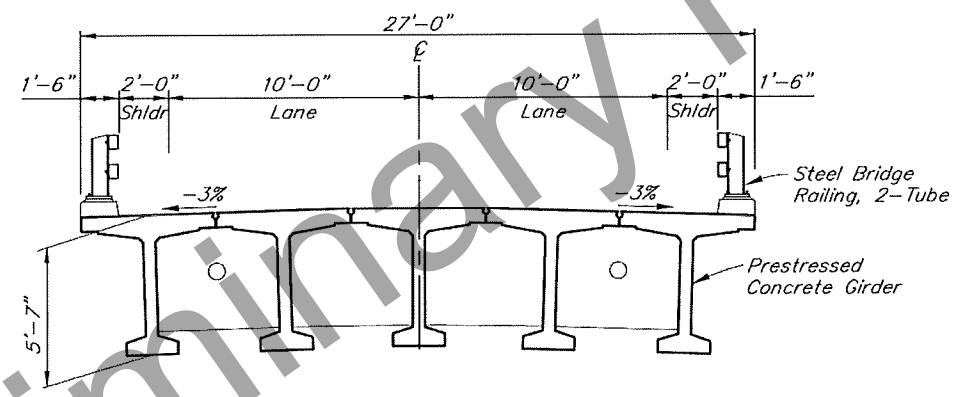

Figure 4: McCarthy Road Bridge Typical Section

PAVEMENT DESIGN

McCarthy Road at the Chokosna River crossing is a gravel road and the project proposes to maintain the gravel surface.

In accordance with the HPCM (Section 1180.7) and in consultation with the Regional Materials Engineer, the gravel surface and structure will be replaced with a gravel structure similar to the existing surface and will be described in the plans as the following (from top down):

- 6" crushed aggregate surface course, type E-1
- Selected material, type A, where fill is required above the existing roadway structure and for embankment fill
- the existing roadway structure and material

Preliminary Plans

NO.	DATE	REVISION	STATE	PROJECT DESIGNATION	YEAR	SHEET NO.	TOTAL SHEETS
			ALASKA	0850028/NFHWY00125	2020	F1	F2

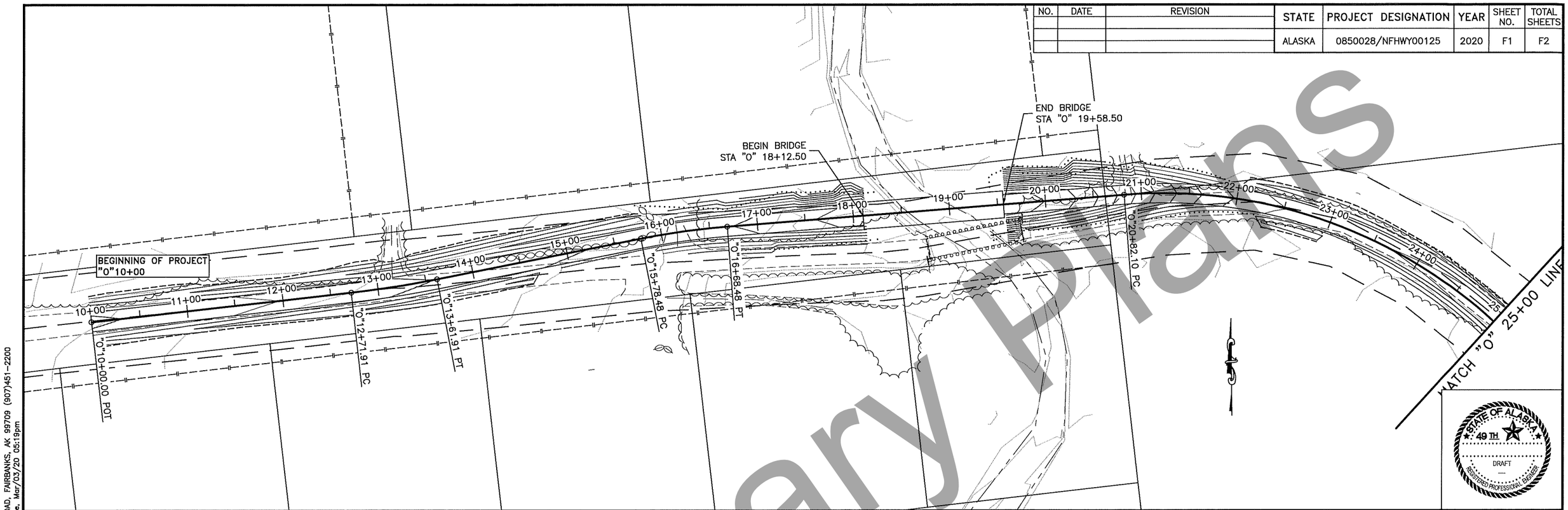

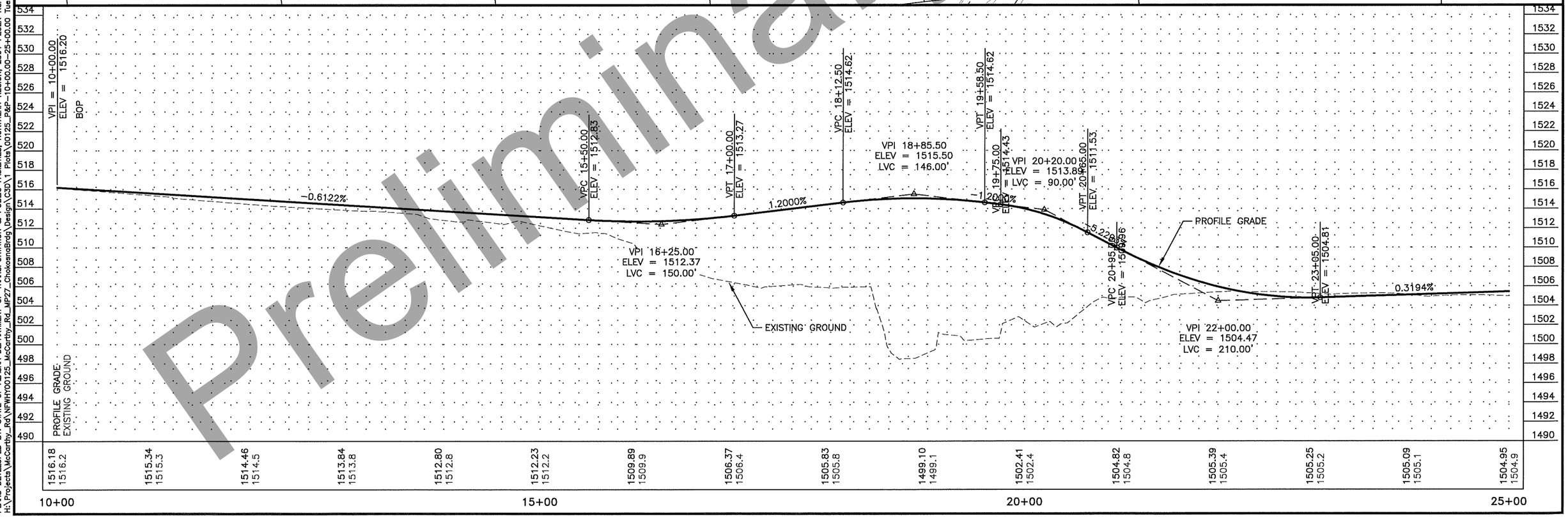

Preliminary Plans

PLANS DEVELOPED BY: STATE OF ALASKA DEPARTMENT OF TRANSPORTATION & PUBLIC FACILITIES, NORTHERN REGION, 2301 PEGER ROAD, FAIRBANKS, AK 99709 (907)451-2200
H:\Projects\McCarthy_Rd\NFHWY00125_McCarthy_Rd_MP27_ChokosnaBrdg\Design\C3D\1 Plots\00125_P&P-10+00.00-25+00.00 Tue, Mar/03/20 05:19pm

NO.	DATE	REVISION	STATE	PROJECT DESIGNATION	YEAR	SHEET NO.	TOTAL SHEETS
			ALASKA	0850028/NFHWY00125	2020	F2	F2

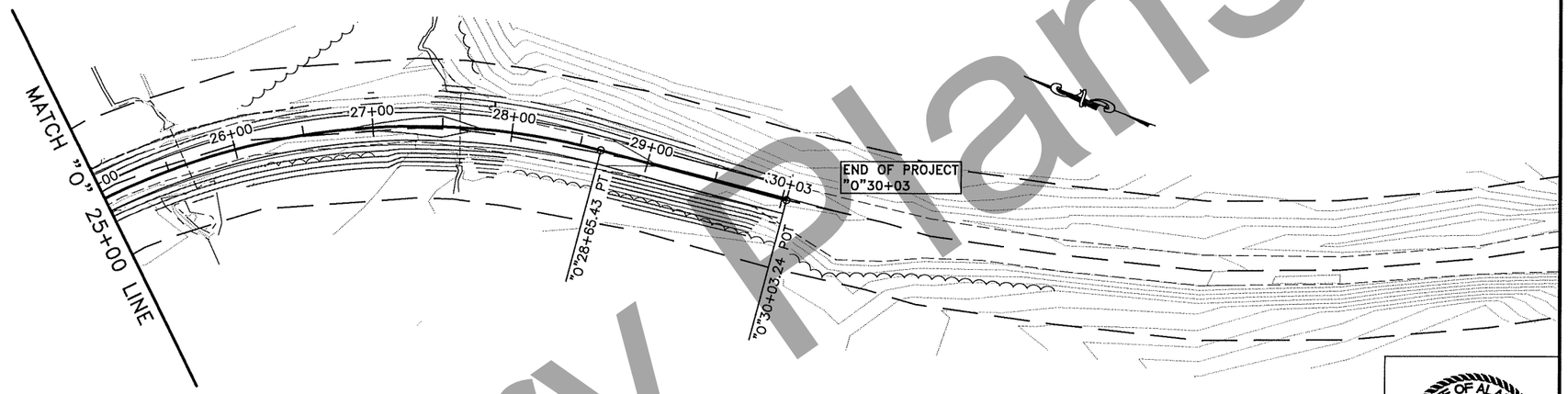

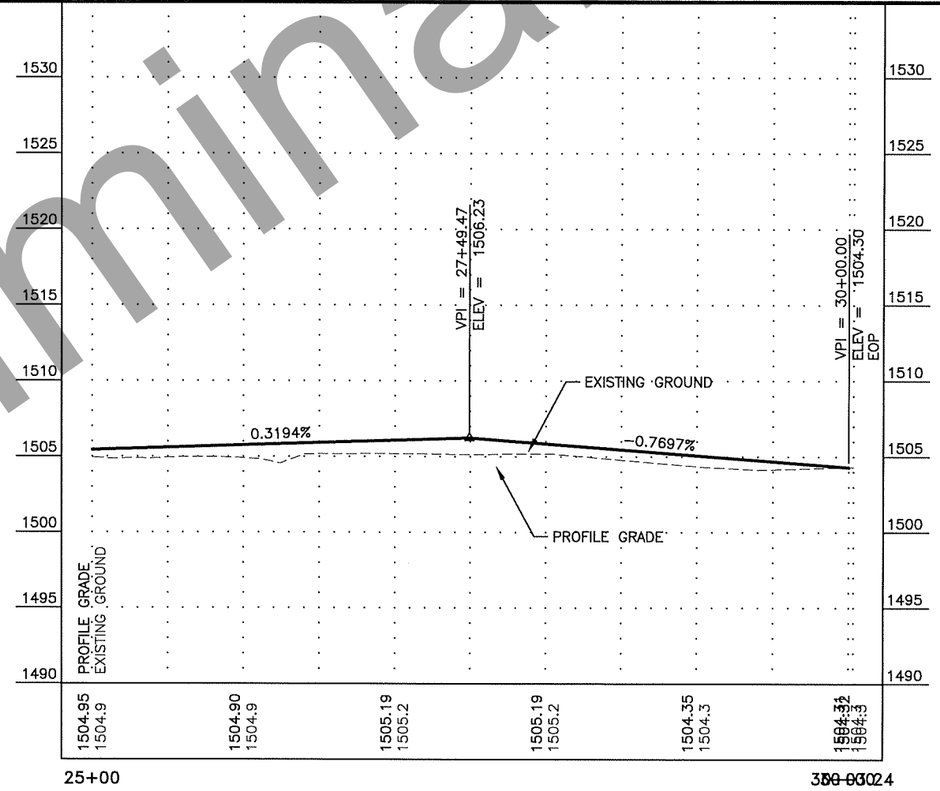

Preliminary Plans

STATE OF ALASKA
49TH
DRAFT
REGISTERED PROFESSIONAL ENGINEER

PLANS DEVELOPED BY: STATE OF ALASKA DEPARTMENT OF TRANSPORTATION & PUBLIC FACILITIES, NORTHERN REGION, 2301 PEGER ROAD, FAIRBANKS, AK 99709 (907)451-2200
H:\Projects\McCarthy_Rd\NFWHY00125_McCarthy_Rd_MP27_ChokosnaBrdg\Design\C3D\1 Plots\00125_P&P-25+00.00-30+03.24 Tue, Mar/03/20 05:19pm

STATE	PROJECT DESIGNATION	YEAR	SHEET NO.	TOTAL SHEETS
ALASKA	NFHWY00125/0850028	2020	N1	N18

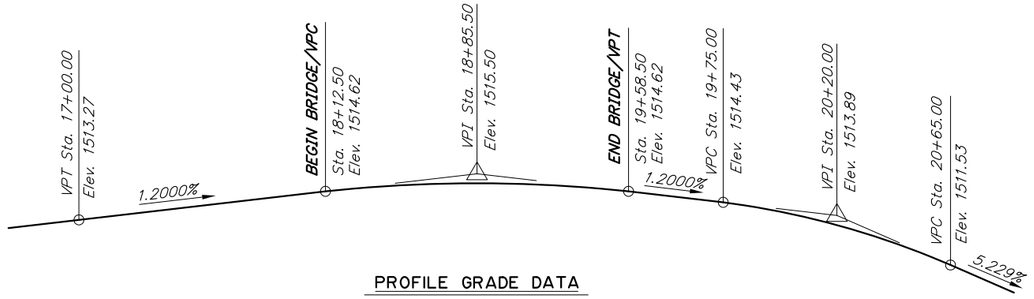

PROFILE GRADE DATA
No Scale

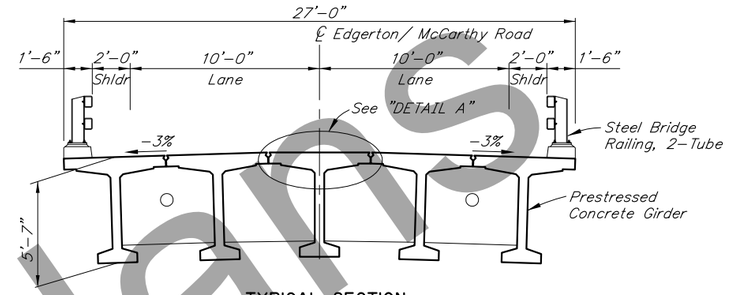

TYPICAL SECTION

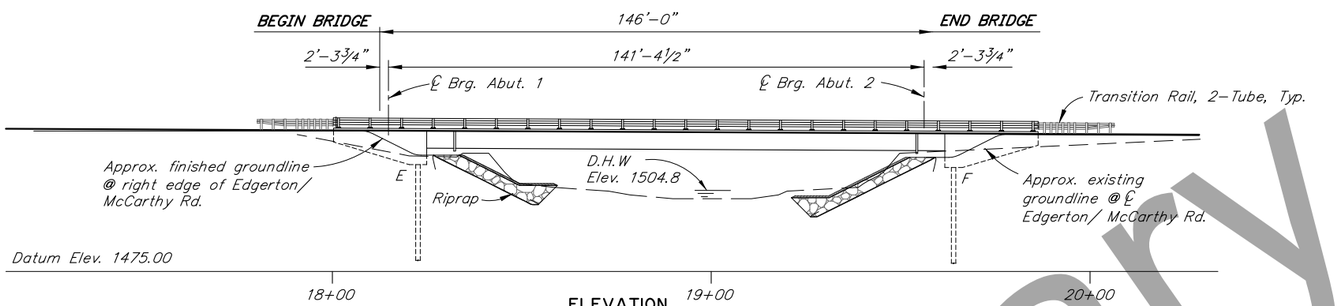

ELEVATION

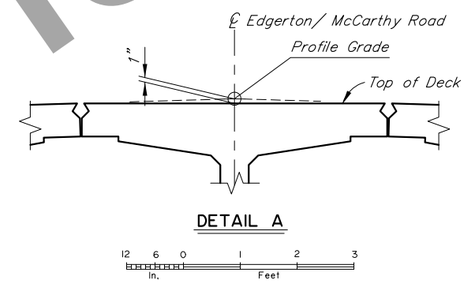

DETAIL A

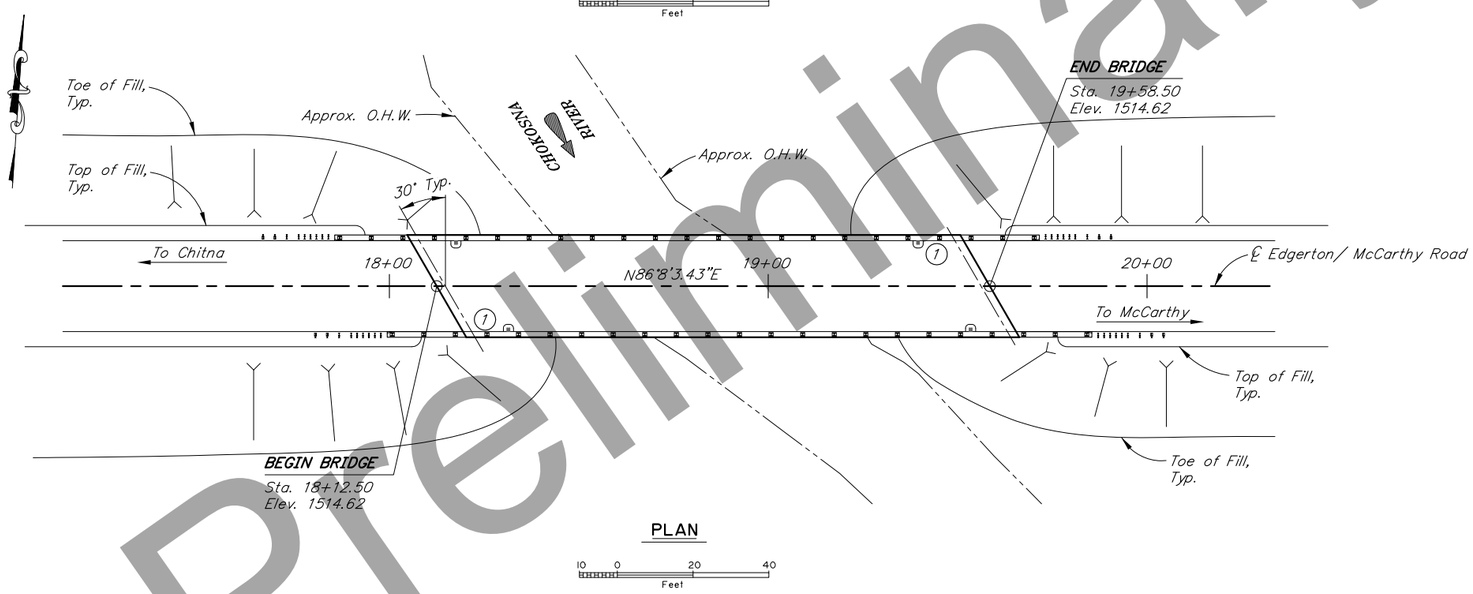

PLAN

BRIDGE DRAWING INDEX

TITLE	DWG. NO.
GENERAL LAYOUT	1
SITE PLAN	2
RIPRAP LAYOUT	3
ABUTMENT 1	4
ABUTMENT 2	5
ABUTMENT DETAILS	6
WINGWALLS	7
FRAMING PLAN AND TYPICAL SECTION	8
GIRDERS	9
GIRDER DETAILS	10
STEEL BRIDGE RAILING, 2-TUBE	11
TRANSITION RAIL, 2-TUBE	12
LOG OF TEST HOLE BORINGS	13-18

PRELIMINARY PLAN

(1) Approximate location of Bridge Number Plate.

Preliminary Plans

DESIGNED BY: Elmer Marx	CHECKED: Douglas Gelineau	LAYOUT BY: Elmer Marx	CHECKED BY: Douglas Gelineau
DRAWN BY: Sam Sollie	CHECKED: Elmer Marx	SPECIFICATIONS BY: Elmer Marx	P S & E COMPARED: Douglas Gelineau
QUANTITIES BY: Elmer Marx	CHECKED: Douglas Gelineau	APPROVAL RECOMMENDED BY: Rich Pratt	

STATE OF ALASKA
DEPARTMENT OF TRANSPORTATION AND PUBLIC FACILITIES
BRIDGE SECTION
3132 Channel Drive
Juneau, Alaska 99801
907-465-2975

CHOKOSNA RIVER BRIDGE
EDGERTON / MCCARTHY ROAD
GENERAL LAYOUT

BRIDGE NO. 1193
DWG. NO. 1

R:\cad\1193\1193-GENERAL Thu, May/21/20 08:12am

STATE	PROJECT DESIGNATION	YEAR	SHEET NO.	TOTAL SHEETS
ALASKA	NFHWY00125/0850028	2020	N2	N18

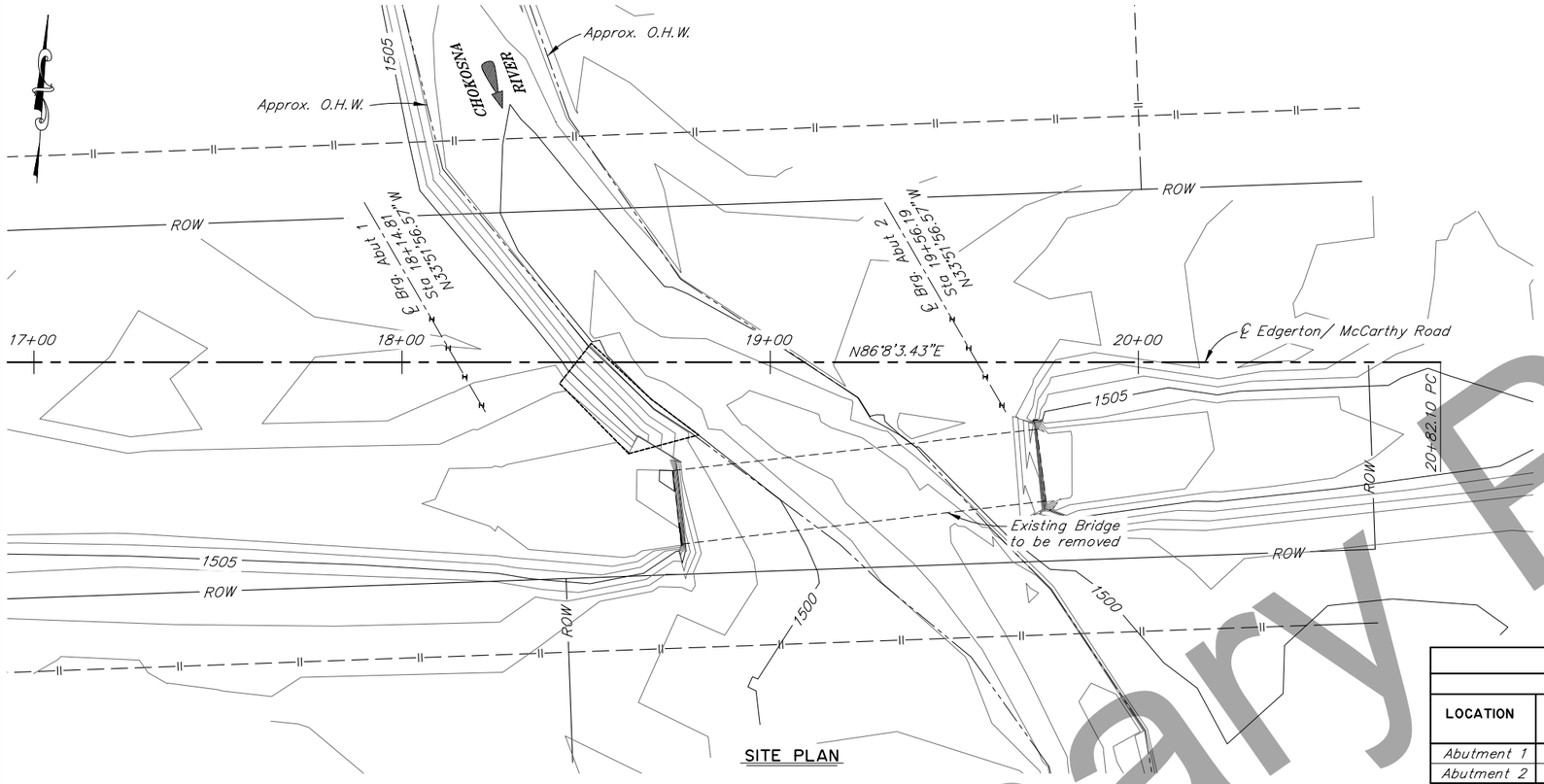

SITE PLAN

10 0 20 40
Feet

GENERAL NOTES

DESIGN:..... AASHTO LRFD Bridge Design Specifications, 2020 Edition, with latest interim specifications.

Seismic design per AASHTO Guide Specifications for LRFD Seismic Bridge Design, 2011 Edition, with latest interim specifications.

LIVE LOAD:..... HL-93

DEAD LOAD:..... Includes 50 psf for all wearing surfaces.

SEISMIC PARAMETERS:..... PGA = 0.32
Ss = 0.72
S1 = 0.31
Site Class = C
Liquefaction Potential = Low
AASHTO 7% probability of exceedance in 75 years.

REINFORCEMENT:..... ASTM A706, Grade 60, Fy = 60,000 psi
ASTM A970, Class HA Headed Bars.
Space reinforcement evenly unless otherwise noted.

PRESTRESSED CONCRETE:..... See "GIRDERS" Dwg.

CONCRETE:..... Class A Concrete, f'c = 4000 psi.

STRUCTURAL STEEL:..... ASTM A709, Grade 36T3, Fy = 36,000 psi, unless otherwise noted. Galvanize all Structural Steel in accordance with AASHTO M111 unless otherwise noted.

STRUCTURAL STEEL PILING:..... ASTM A709, GR50T3, Fy = 50,000 psi.
Pile Tip reinforcing is required.

PILE DATA TABLE

		DRIVING CRITERIA			DESIGN DATA		
LOCATION	PILE TYPE	MINIMUM PENETRATION (ft)	ESTIMATED PILE TIP ELEVATION (ft)	DRIVING RESISTANCE (K)	STRENGTH I FACTORED LOAD (K)	NOMINAL RESISTANCE (K)	RESISTANCE FACTOR, ϕ
Abutment 1	HP 14x117	35	1,399	615	400	615	0.65
Abutment 2	HP 14x117	35	1,399	615	400	615	0.65

Pile prebore to one foot of the minimum penetration is required. Maximum prebore diameter is 10 inches.

ESTIMATE OF QUANTITIES

ITEM NO.	ITEM	PAY UNIT	ESTIMATING UNIT	SUBST.	SUPERST.	TOTAL QUANTITY
202.0023.0000	Removal of Bridge	LS	LS	All Req'd	All Req'd	All Req'd
203.0003.0000	Unclassified Excavation	CY	CY	381	---	381
205.0006.0000	Structural Fill	CY	CY	850	---	850
501.0001.0000	Class A Concrete	LS	CY	69.0	51.7	120.7
501.0007.0000	Precast Concrete Member, 143'-2" Decked Bulb-Tee	EA	EA	---	5	5
503.0001.0000	Reinforcing Steel	LS	LBS	13,400	---	13,400
503.0002.0000	Epoxy-Coated Reinforcing Steel	LS	LBS	---	3,130	3,130
505.0005.1417	Furnish Structural Steel Piles, HP 14x117	LF	LF	853.0	---	853.0
505.0006.1417	Drive Structural Steel Piles, HP 14x117	EA	EA	8	---	8
507.0001.0002	Steel Bridge Railing, 2-Tube	LF	LF	---	372.0	372.0
606.0016.0002	Transition Rail	EA	EA	---	4	4
611.0001.0001	Riprap, Class I	CY	CY	274	---	274
611.0001.0003	Riprap, Class III	CY	CY	1,684	---	1,684
631.0002.0001	Geotextile, Erosion Control, Class 1	SY	SY	1,264	---	1,264

Item numbers are for reference only. Quantities shown are not necessarily the pay quantities nor the total quantity of the particular item.

ABBREVIATIONS:

℄ = centerline
℗ = plate
& = and
@ = at
ø = diameter
± = approximate
AASHTO = American Association of State Highway and Transportation Officials
ASTM = American Society for Testing and Materials
Abut. = abutment
Approx. = approximate
b.f. = back/dirt face
bot. = bottom
Br. = bridge
btwn. = between
Brg. = bearings
C.G. = center of gravity
C.I.P. = cast in place
CJP = complete joint penetration
Clr. = clear, clearance
CMP = corrugated metal pipe
CY = cubic yard
Dia. = diameter
Dwg. = drawing
E = expansion
(E) = existing
EA = each
Elev. = elevation
e.f. = each face
e.w. = each way
Ext. = exterior
F = fixed
f.f. = front/air face
f'c = specified concrete compressive strength
f'ci = specified concrete compressive strength at release
Ft. = feet
Fy = yield stress
Glav. = galvanize
H.S. = high strength
Hwy. = highway
ID = internal diameter
Int. = interior
Jt. = joint
K = kips
ksf = 1000 pounds per square foot
ksi = 1000 pounds per square inch
LBS or lb = pounds
LF = linear foot
LS = lump sum
LT. = left
max. = maximum
min. = minimum
MSE = mechanically stabilized earth
n.f. = near face
No. = number
o.c. = on center
O.H.W. = ordinary high water
pcf = pounds per cubic foot
psf = pounds per square foot
psi = pounds per square inch
R = radius
ROW = right of way
RT. = right
Rd. = road
spcs. = space, spaces
Sta. = station
SF = square feet
SY = square yard
Std. = standard
Symm. = symmetric
— — —‖— — — = Temporary Construction Easement
Typ. = typical
UT = ultrasonic testing
V.P.C. = point of vertical curve
V.P.I. = point of vertical intersection
V.P.T. = point of vertical tangent
w/ = with

Preliminary Plans

DESIGNED BY: Elmer Marx	CHECKED: Douglas Gelineau	FOUNDATIONS REVIEWED BY: Dave Hemstreet	
DRAWN BY: Sam Sollie	CHECKED: Elmer Marx	PRELIMINARY PLAN	
QUANTITIES BY: Elmer Marx	CHECKED: Douglas Gelineau		

STATE OF ALASKA
DEPARTMENT OF TRANSPORTATION AND PUBLIC FACILITIES
BRIDGE SECTION
3132 Channel Drive
Juneau, Alaska 99801
907-465-2975

CHOKOSNA RIVER BRIDGE
EDGERTON / MCCARTHY ROAD
SITE PLAN

BRIDGE NO. 1193
DWG. NO. 2

R:\cad\1193\1193-SITE PLAN Thu, May/21/20 08:12am

STATE	PROJECT DESIGNATION	YEAR	SHEET NO.	TOTAL SHEETS
ALASKA	NFHWY00125/0850028	2020	N3	N18

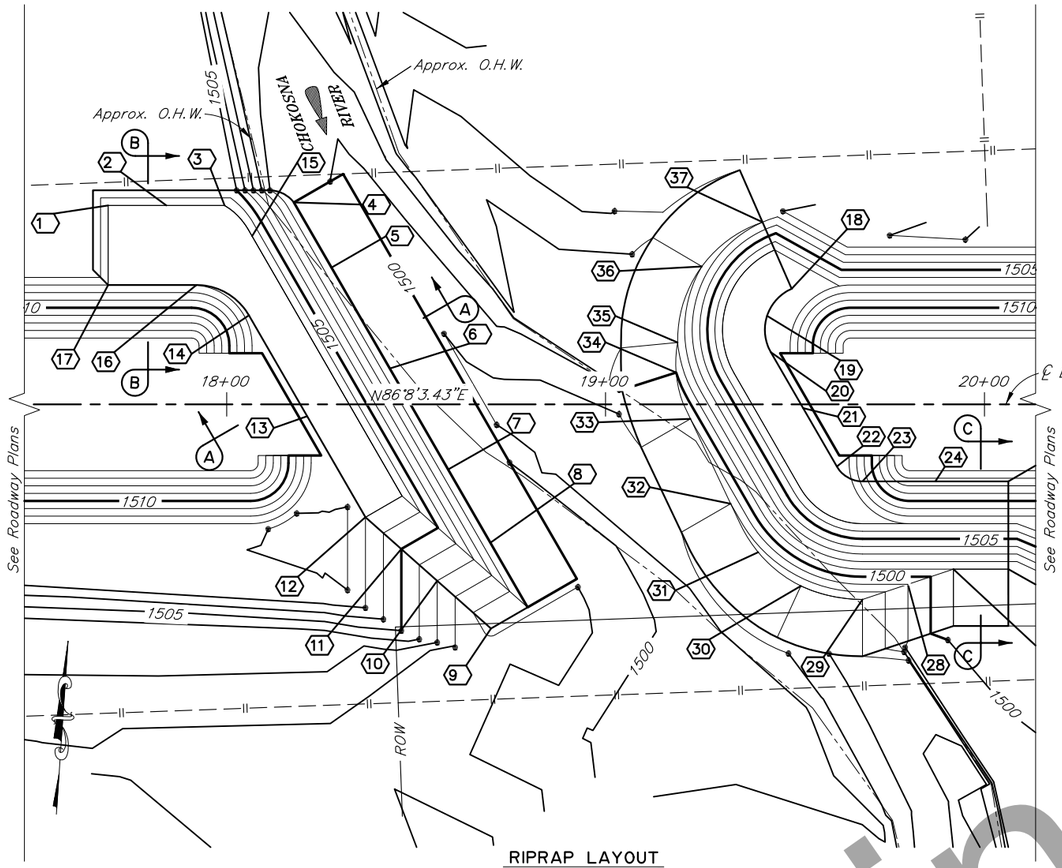

RIPRAP LAYOUT

10 0 20 40
Feet

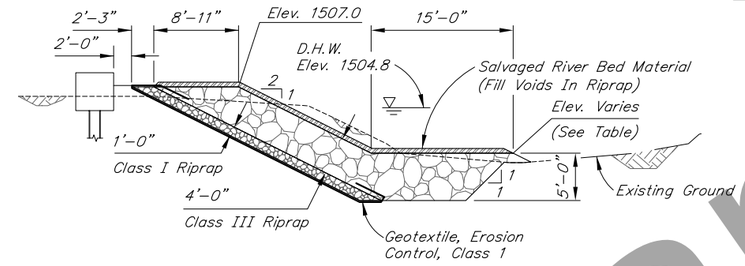

SECTION A-A

No Scale

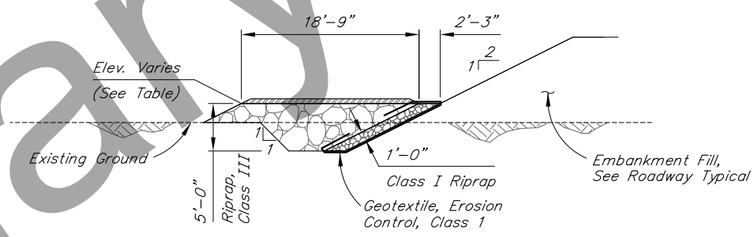

SECTION B-B

No Scale

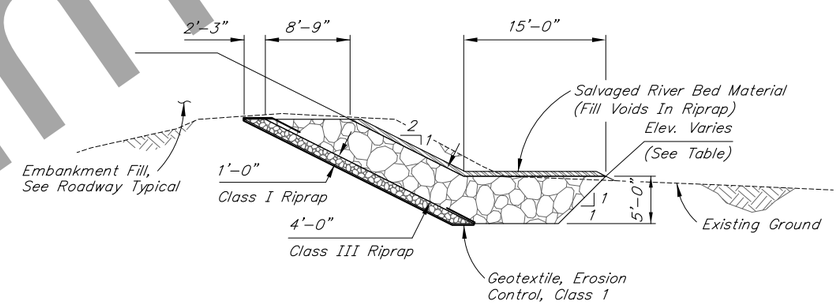

SECTION C-C

No Scale

RIPRAP TABLE

POINT	STATION	OFFSET	ELEVATION
1	17+68.7	26.5' Left	1507.0'
2	17+84.1	20.6' Left	1507.0'
3	17+99.4	5.5' Left	1507.0'
4	18+17.7	13.3' Left	1500.0'
5	18+27.7	27.9' Left	1500.0'
6	18+43.0	49.5' Left	1500.0'
7	18+58.4	36.0' Right	1500.0'
8	18+69.6	20.3' Right	1500.0'
9	18+69.7	5.5' Right	1500.0'
10	18+55.6	21.4' Right	1503.0'
11	18+46.1	36.0' Right	1505.0'
12	18+36.6	43.4' Right	1507.0'
13	18+21.2	46.4' Right	1507.0'
14	18+05.9	51.8' Left	1507.0'
15	18+06.7	27.3' Left	1507.0'
16	17+92.0	12.1' Left	1507.0'
17	17+68.7	26.4' Left	1507.0'
18	19+49.1	47.1' Left	1507.0'
19	19+42.6	61.3' Left	1507.0'
20	19+43.6	65.9' Left	1507.0'
21	19+52.1	25.5' Right	1507.0'
22	19+61.0	19.8' Right	1507.0'
23	229+90.2	5.8' Right	1507.0'
24	229+64.4	27.8' Right	1507.0'
25	229+38.6	28.8' Right	1507.0'
26	229+07.3	29.8' Right	1501.0'
27	229+32.0	30.8' Right	1501.0'
28	229+52.1	31.8' Right	1499.0'
29	229+72.1	32.8' Right	1497.0'
30	229+92.2	33.8' Right	1497.0'
31	230+12.3	34.8' Right	1497.4'
32	230+32.3	35.8' Right	1498.0'
33	230+80.9	36.8' Right	1499.0'
34	230+88.7	37.8' Left	1500.0'
35	231+14.0	38.8' Left	1501.0'
36	231+39.2	39.8' Left	1502.0'
37	231+64.3	40.8' Left	1503.0'

HYDRAULIC & HYDROLOGIC SUMMARY

Flood Frequency (Yr.)	50	100	500
Exceedance Probability (%)	2	1	0.2
Discharge (cfs)	1,950	2,250	2,970
Water Surface Elevation (ft)	1504.5	1504.8	1505.8
Anticipated Add'l Backwater (ft)		0	
Contraction Scour (ft)		0	0
Abutment Scour (ft)		0.6	0.7
Long-Term Degradation (ft)		1.0	

Drainage Area for this crossing:...40 square miles

Hydraulic Capacity:.....Roughly 6,500 C.F.S.

RIPRAP NOTES:

1. Details show a 6" fill depth of salvaged streambed material over the top of riprap, but should be interpreted as the filling of interstitial voids. Final fill depths and acceptance of any boulder "protrusions" through the salvaged streambed fill layer are at the discretion of the Engineer.
2. Toe of riprap elevation to change at a consistent slope during transition from one elevation contour to the next.

Preliminary Plans

DESIGNED BY: Designer	CHECKED: Checker	PRELIMINARY PLAN	STATE OF ALASKA DEPARTMENT OF TRANSPORTATION AND PUBLIC FACILITIES BRIDGE SECTION 3132 Channel Drive Juneau, Alaska 99801 907-465-2975
DRAWN BY: Sam Sollie	CHECKED: Designer		
QUANTITIES BY: Designer	CHECKED: Checker		

CHOKOSNA RIVER BRIDGE

EDGERTON / MCCARTHY ROAD

RIPRAP LAYOUT

BRIDGE NO. 1193

DWG. NO. 3

R:\cad\1193\1193-RR LAYOUT Thu, May/21/20 08:13am

STATE	PROJECT DESIGNATION	YEAR	SHEET NO.	TOTAL SHEETS
ALASKA	NFHWY00125/0850028	2020	N4	N18

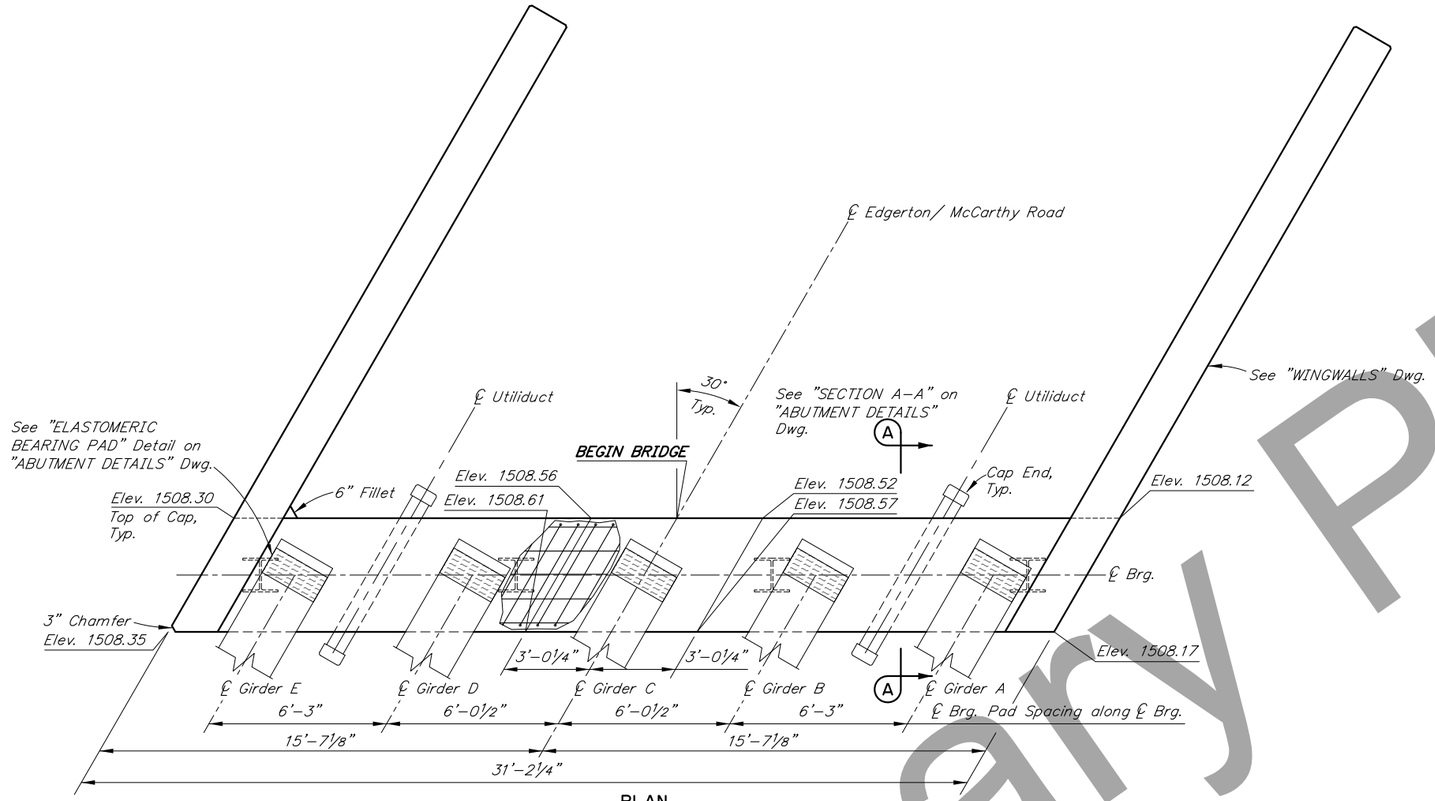

PLAN

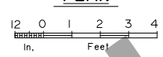

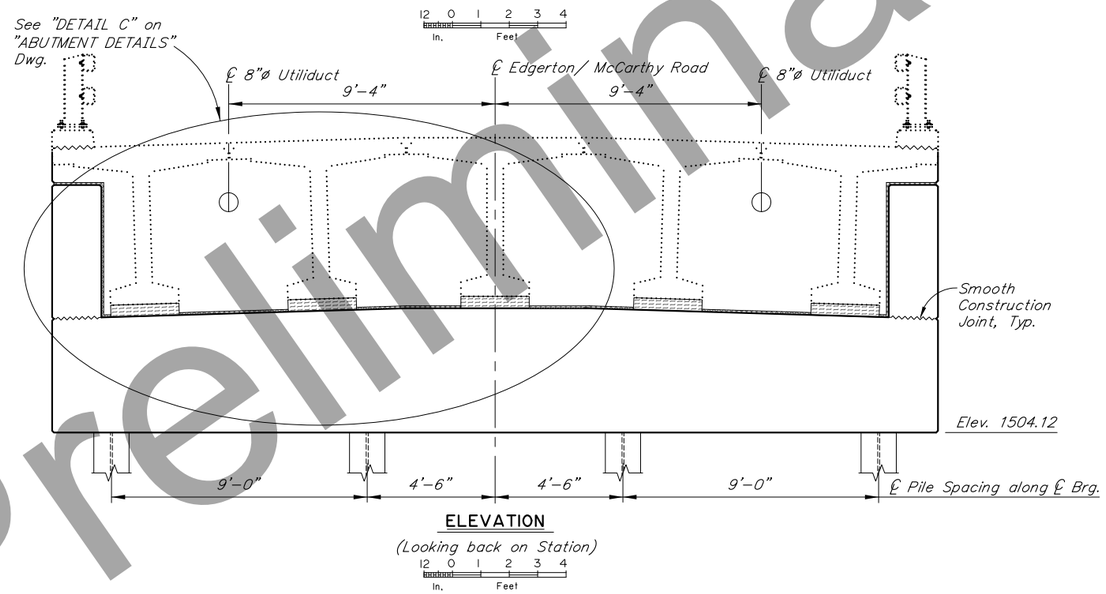

ELEVATION

(Looking back on Station)

REINFORCING STEEL - ABUTMENT I

MARK	NOTE	SIZE	NO.	LENGTH	TYPE	BENDING DIAGRAM
A401		4	112	VARIES	STIRRUP	
A501	E	5	26	19'–9"	STIRRUP	
A601		6	10	30'–10"	---	
A602	E,M	6	10	27'–2"	---	
A603	E,M	6	7	30'–10"	---	
A701	E	7	8	3'–0"	BENT	
A1001	H,M	10	14	30'–10"	HEADED	

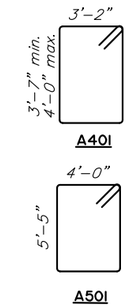

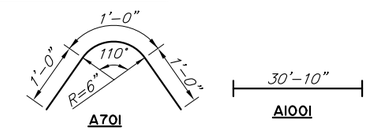

E – Epoxy–Coated
H – Headed reinforcing steel
M – Field adjust to match cross slope

Preliminary Plans

DESIGNED BY: Elmer Marx	CHECKED: Douglas Gelineau	PRELIMINARY PLAN	STATE OF ALASKA DEPARTMENT OF TRANSPORTATION AND PUBLIC FACILITIES BRIDGE SECTION 3132 Channel Drive Juneau, Alaska 99801 907–465–2975
DRAWN BY: Sam Sollie	CHECKED: Elmer Marx		
QUANTITIES BY: Elmer Marx	CHECKED: Douglas Gelineau		

CHOKOSNA RIVER BRIDGE

EDGERTON / MCCARTHY ROAD

ABUTMENT 1

BRIDGE NO. 1193

DWG. NO. 4

R:\cad\1193\1193-1-ABUT 1 Thu, May/21/20 08:14am

STATE	PROJECT DESIGNATION	YEAR	SHEET NO.	TOTAL SHEETS
ALASKA	NFHWY00125/0850028	2020	N5	N18

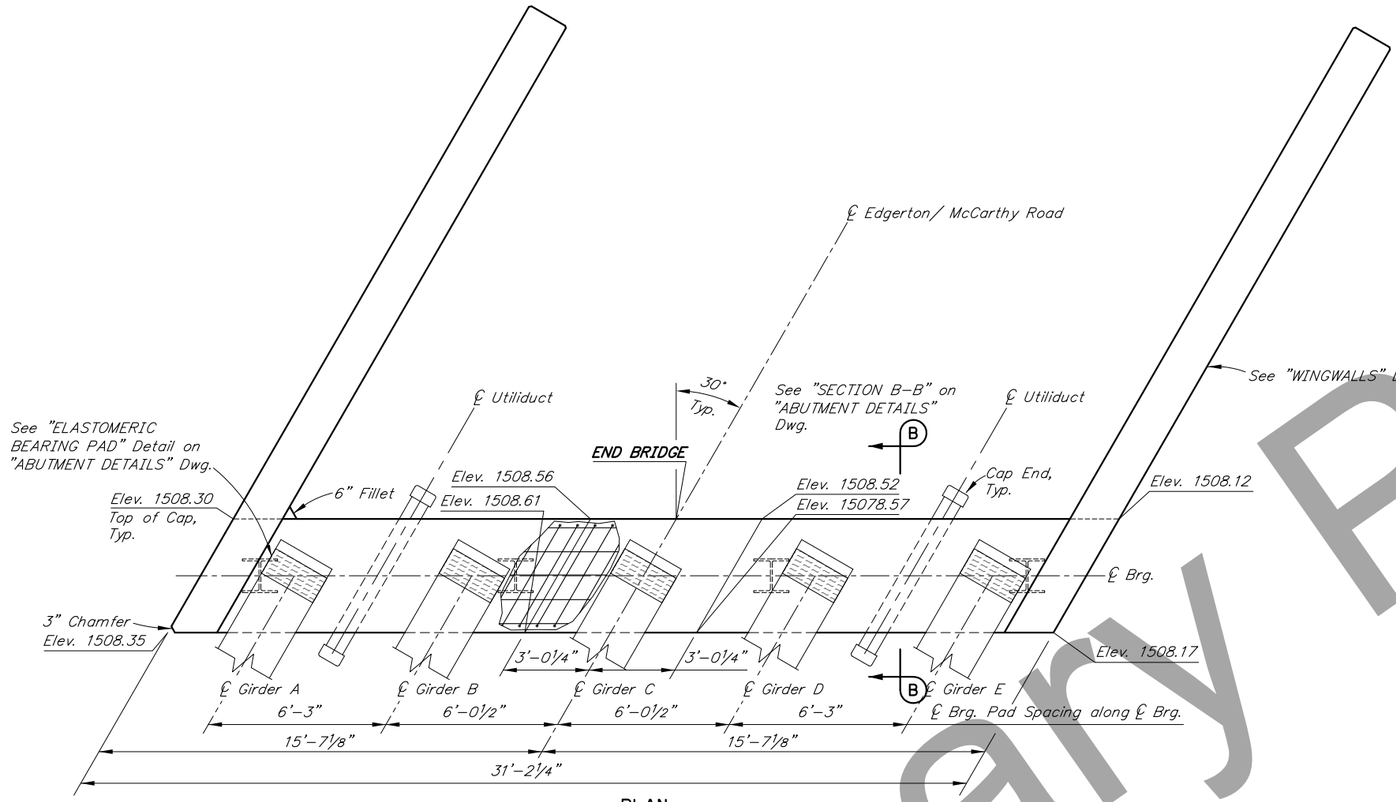

PLAN

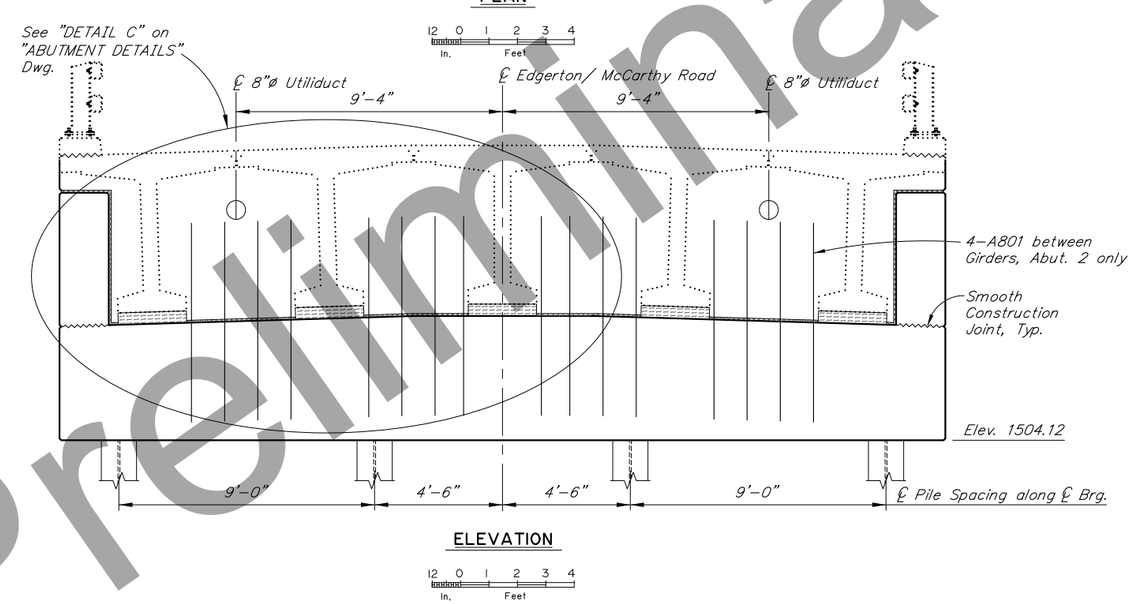

ELEVATION

12 0 1 2 3 4
In. Feet

REINFORCING STEEL - ABUTMENT 2

MARK	NOTE	SIZE	NO.	LENGTH	TYPE	BENDING DIAGRAM
A401		4	112	VARIES	STIRRUP	
A501	E	5	26	19'–9"	STIRRUP	
A601		6	10	30'–10"	---	
A602	E,M	6	10	27'–2"	---	
A603	E,M	6	7	30'–10"	---	
A701	E	7	8	3'–0"	BENT	
A801		8	16	7'–0"	---	
A1001	H,M	10	14	30'–10"	HEADED	

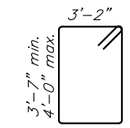

A401

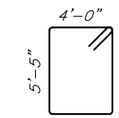

A501

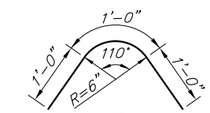

A701

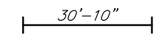

A1001

E – Epoxy–Coated
H – Headed reinforcing steel
M – Field adjust to match cross slope

Preliminary Plans

DESIGNED BY: Elmer Marx	CHECKED: Douglas Gelineau	PRELIMINARY PLAN	STATE OF ALASKA DEPARTMENT OF TRANSPORTATION AND PUBLIC FACILITIES BRIDGE SECTION 3132 Channel Drive Juneau, Alaska 99801 907–465–2975
DRAWN BY: Sam Sollie	CHECKED: Elmer Marx		
QUANTITIES BY: Elmer Marx	CHECKED: Douglas Gelineau		

CHOKOSNA RIVER BRIDGE
EDGERTON / MCCARTHY ROAD
ABUTMENT 2

BRIDGE NO. 1193
DWG. NO. 5

R:\cad\1193\1193-1-ABUT 2 Thu, May/21/20 08:14am

STATE	PROJECT DESIGNATION	YEAR	SHEET NO.	TOTAL SHEETS
ALASKA	NFHWY00125/0850028	2020	N6	N18

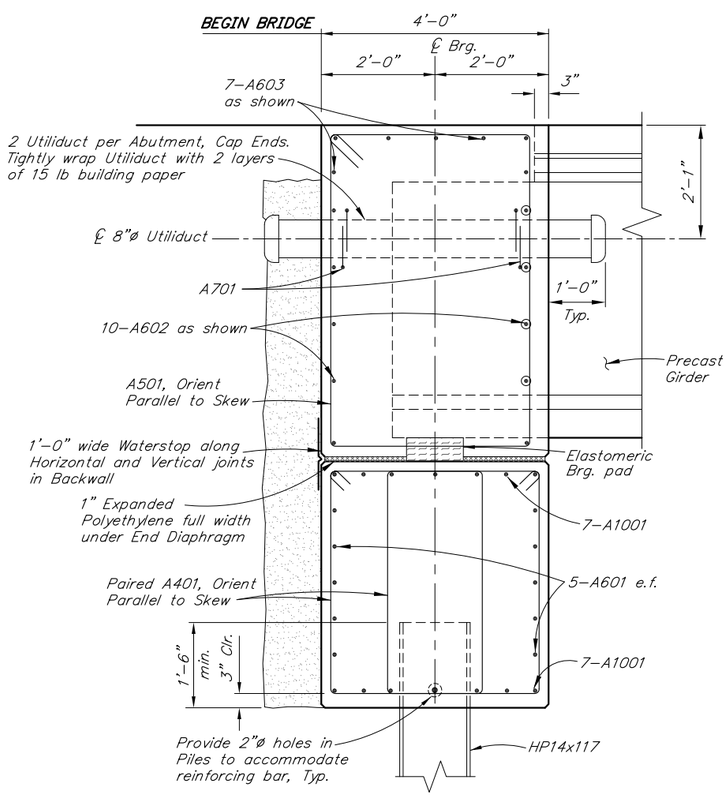

SECTION A-A

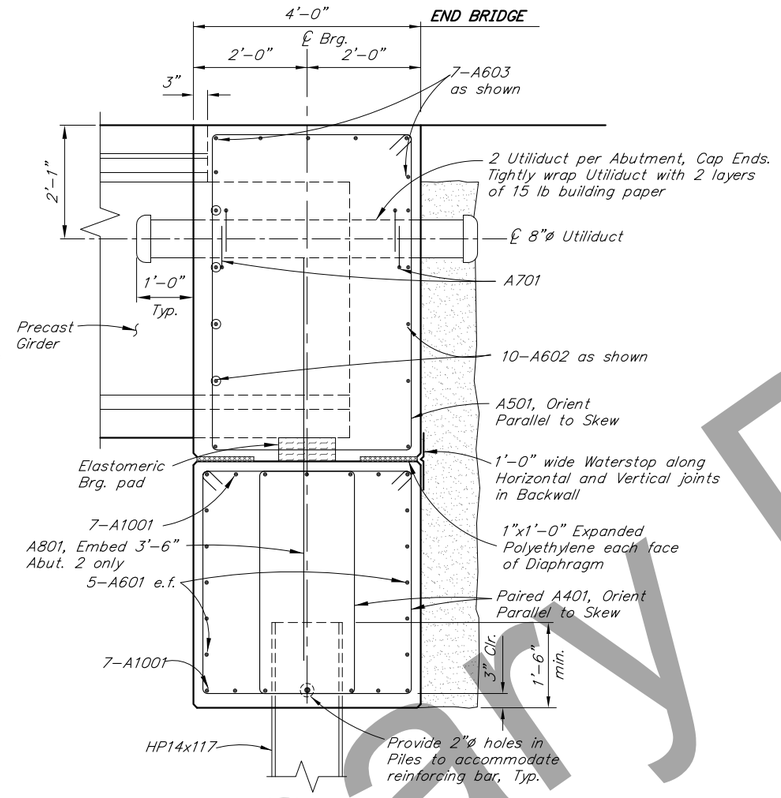

SECTION B-B

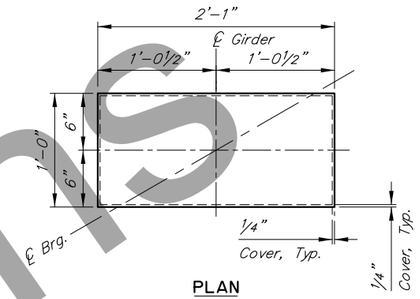

PLAN

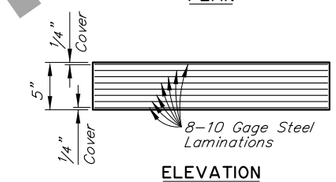

ELEVATION

ELASTOMERIC BEARING PAD

Grade 5
Dead Load = 105 k
Live Load = 79 k
Shear Modulus = 115 psi

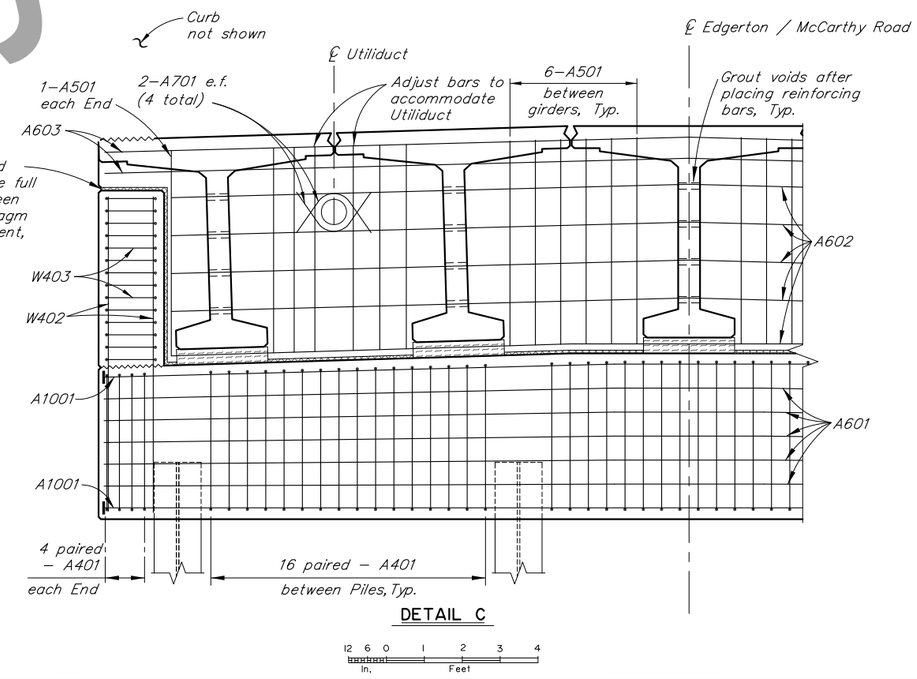

DETAIL C

Preliminary Plans

DESIGNED BY: Elmer Marx	CHECKED: Douglas Gelineau	PRELIMINARY PLAN	STATE OF ALASKA DEPARTMENT OF TRANSPORTATION AND PUBLIC FACILITIES BRIDGE SECTION 3132 Channel Drive Juneau, Alaska 99801 907-465-2975
DRAWN BY: Sam Sollie	CHECKED: Elmer Marx		
QUANTITIES BY: Elmer Marx	CHECKED: Douglas Gelineau		

CHOKOSNA RIVER BRIDGE
EDGERTON / MCCARTHY ROAD
ABUTMENT DETAILS

BRIDGE NO. 1193
DWG. NO. 6

R:\cad\1193\1193-1-ABUT DET Thu, May/21/20 08:14am

STATE	PROJECT DESIGNATION	YEAR	SHEET NO.	TOTAL SHEETS
ALASKA	NFHWY00125/0850028	2020	N7	N18

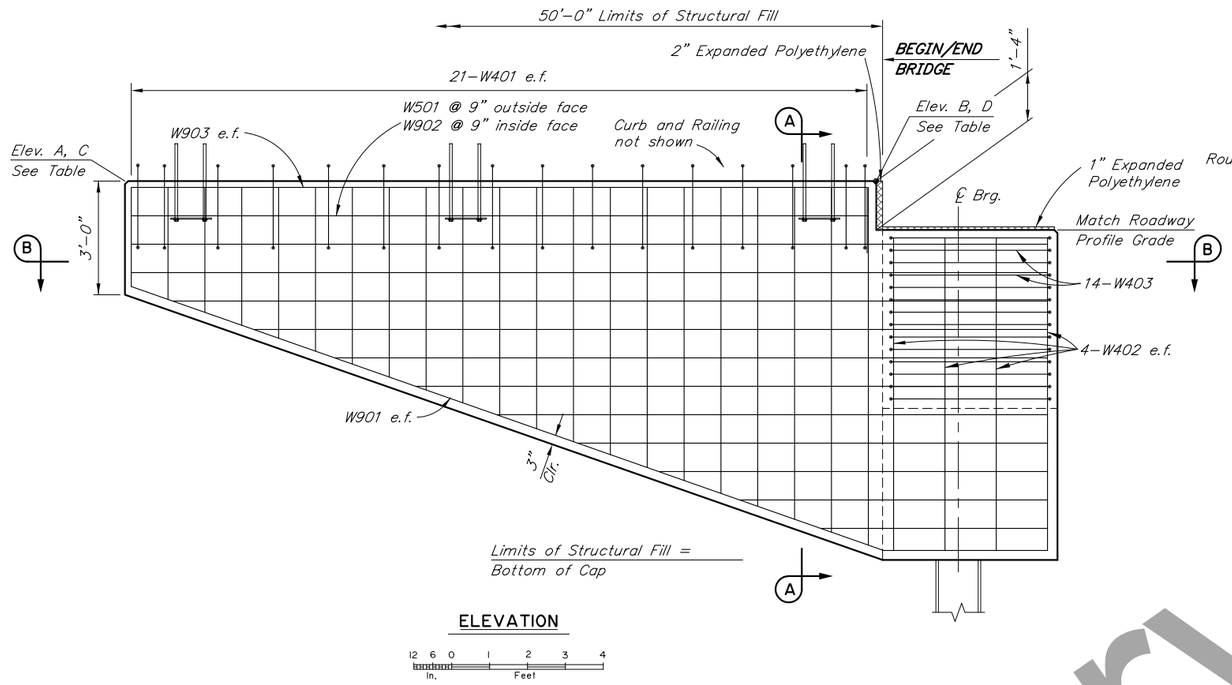

ELEVATION

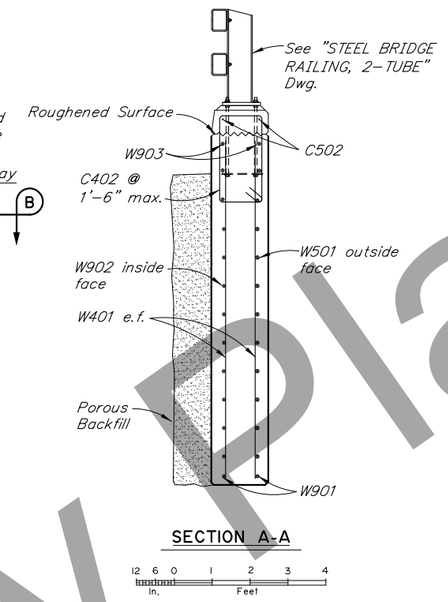

SECTION A-A

REINFORCING STEEL - ONE ABUTMENT

MARK	NOTE	SIZE	NO.	LENGTH	TYPE	BENDING DIAGRAM
W401		4	84	VARIES	---	4'-10" Min. / 24'-11" Max. W501, W902
W402		4	16	8'-4"	---	
W403		4	28	11'-7"	BENT	
W501		5	24	VARIES	---	
W901		9	4	VARIES	BENT	
W902		9	24	VARIES	---	
W903		9	4	VARIES	BENT	18'-8" Min / 20'-2" Max C502
C402	E	4	32	7'-7"	BENT	
C502	E	5	4	VARIES	---	

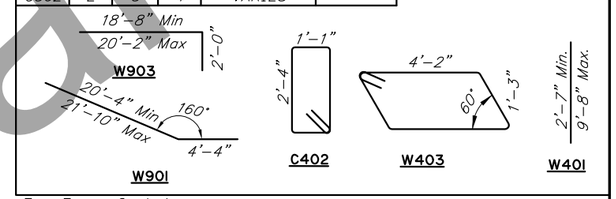

E - Epoxy-Coated

TOP OF WINGWALL ELEVATION TABLE (FT)

LOCATION	A UPSTREAM	B UPSTREAM	C DOWNSTREAM	D DOWNSTREAM
ABUTMENT 1	1513.94	1514.18	1514.11	1514.34
ABUTMENT 2	1514.11	1514.34	1513.92	1514.18

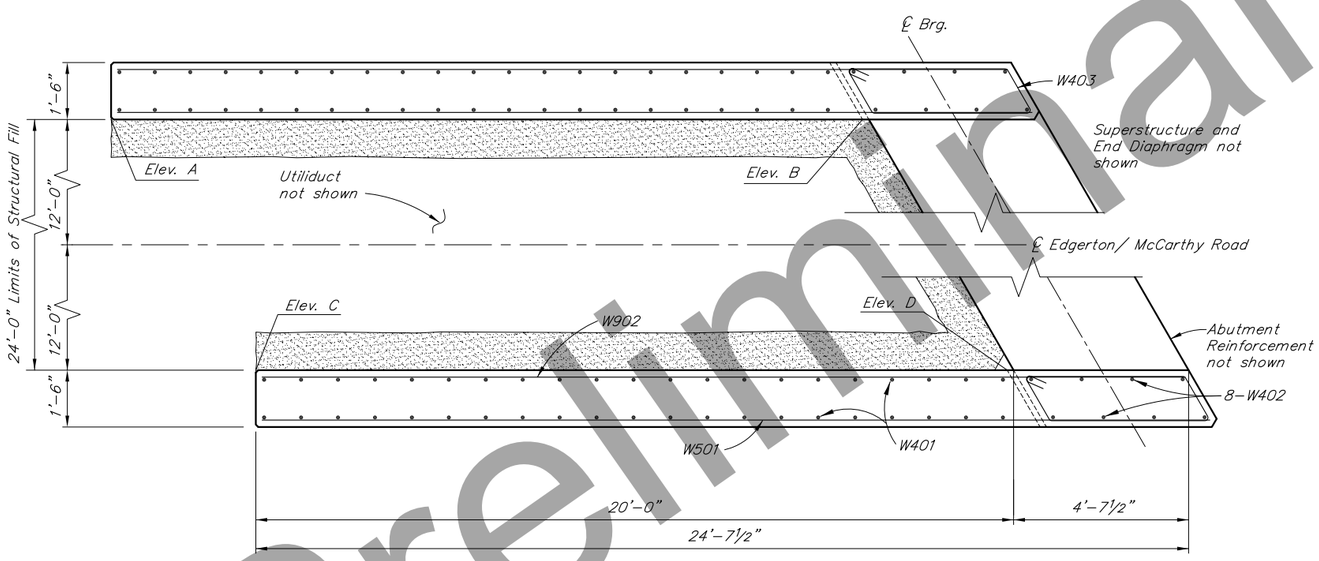

SECTION B-B

(Abutment 1 shown, Abutment 2 similar)

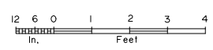

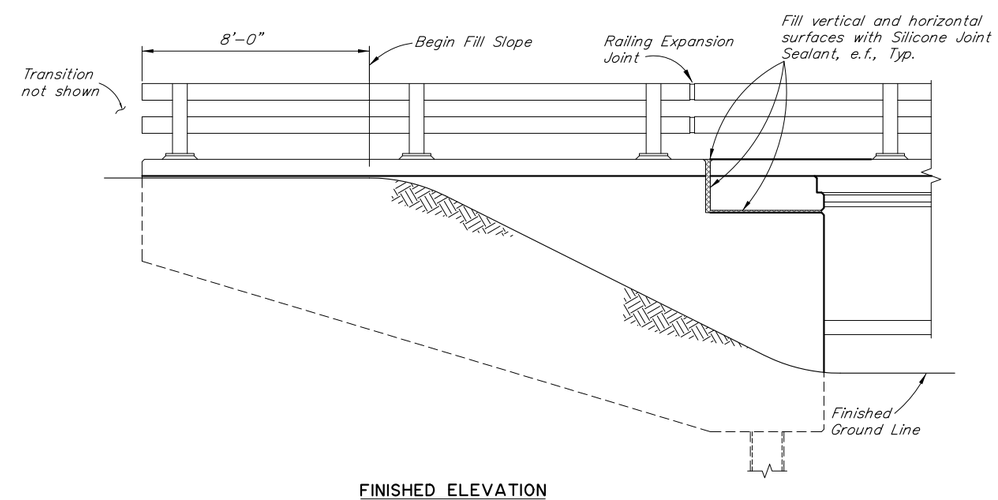

FINISHED ELEVATION

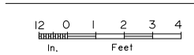

Preliminary Plans

DESIGNED BY: Elmer Marx	CHECKED: Douglas Gelineau	PRELIMINARY PLAN	STATE OF ALASKA DEPARTMENT OF TRANSPORTATION AND PUBLIC FACILITIES BRIDGE SECTION 3132 Channel Drive Juneau, Alaska 99801 907-465-2975
DRAWN BY: Sam Sollie	CHECKED: Elmer Marx		
QUANTITIES BY: Elmer Marx	CHECKED: Douglas Gelineau		

CHOKOSNA RIVER BRIDGE

EDGERTON / MCCARTHY ROAD

WINGWALLS

BRIDGE NO. 1193

DWG. NO. 7

R:\cad\1193\1193-1-WINGWALLS Thu, May/21/20 08:14am

STATE	PROJECT DESIGNATION	YEAR	SHEET NO.	TOTAL SHEETS
ALASKA	NFHWY00125/0850028	2020	N8	N18

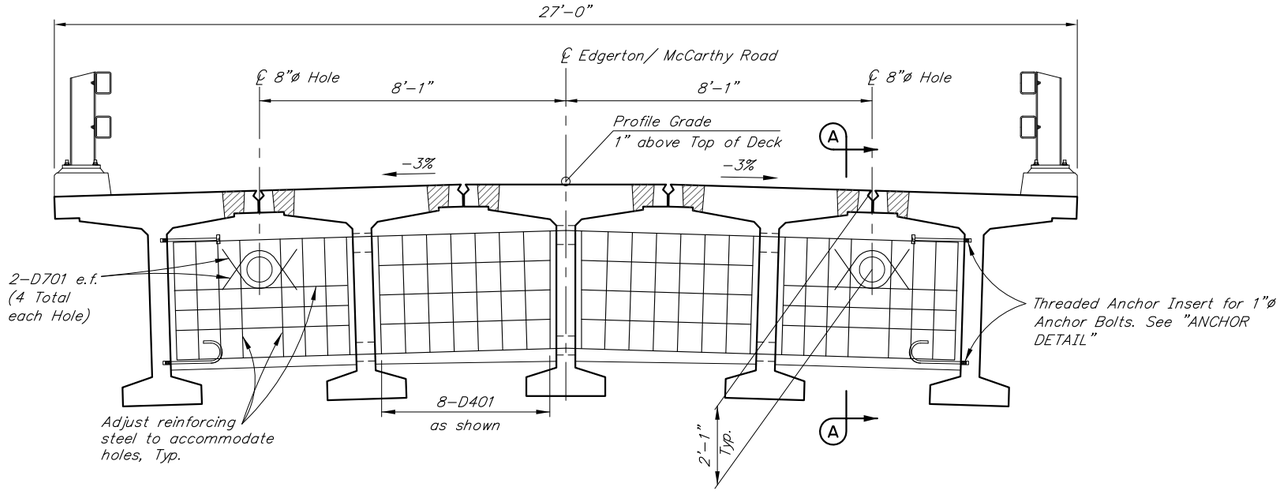

TYPICAL SECTION

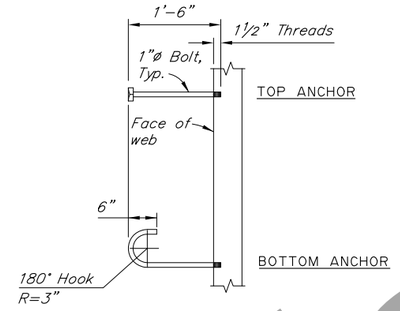

ASTM A307 GALVANIZED

ANCHOR DETAIL

REINFORCING STEEL-ONE DIAPHRAGM

MARK	NOTE	SIZE	NO.	LENGTH	TYPE	BENDING DIAGRAM
D401	E	4	32	8'-1"	STIRRUP	
D501	E	5	24	5'-2"	---	
D601	E,M	6	4	24'-0"	---	
D701	E	7	8	3'-0"	BENT	

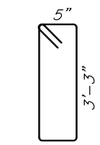

D401

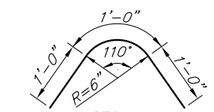

D701

E - Epoxy-Coated
M - Field adjust to match cross slope

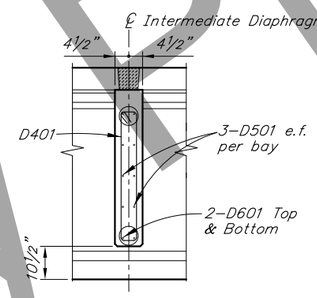

SECTION A-A

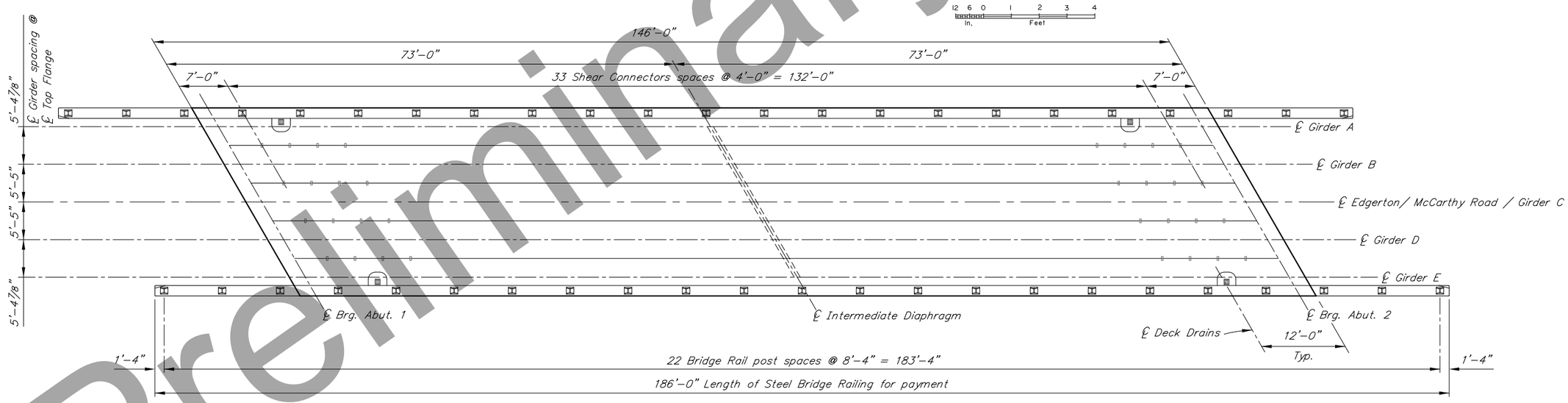

FRAMING PLAN

Preliminary Plans

DESIGNED BY: Elmer Marx	CHECKED: Douglas Gelineau	PRELIMINARY PLAN	STATE OF ALASKA DEPARTMENT OF TRANSPORTATION AND PUBLIC FACILITIES BRIDGE SECTION 3132 Channel Drive Juneau, Alaska 99801 907-465-2975
DRAWN BY: Sam Sollie	CHECKED: Elmer Marx		
QUANTITIES BY: Elmer Marx	CHECKED: Douglas Gelineau		

CHOKOSNA RIVER BRIDGE

EDGERTON / MCCARTHY ROAD

FRAMING PLAN AND TYPICAL SECTION

BRIDGE NO. 1193

DWG. NO. 8

R:\cad\1193\1193-1-TYPICAL Thu, May/21/20 08:14am

STATE	PROJECT DESIGNATION	YEAR	SHEET NO.	TOTAL SHEETS
ALASKA	NFHWY00125/0850028	2020	N9	N18

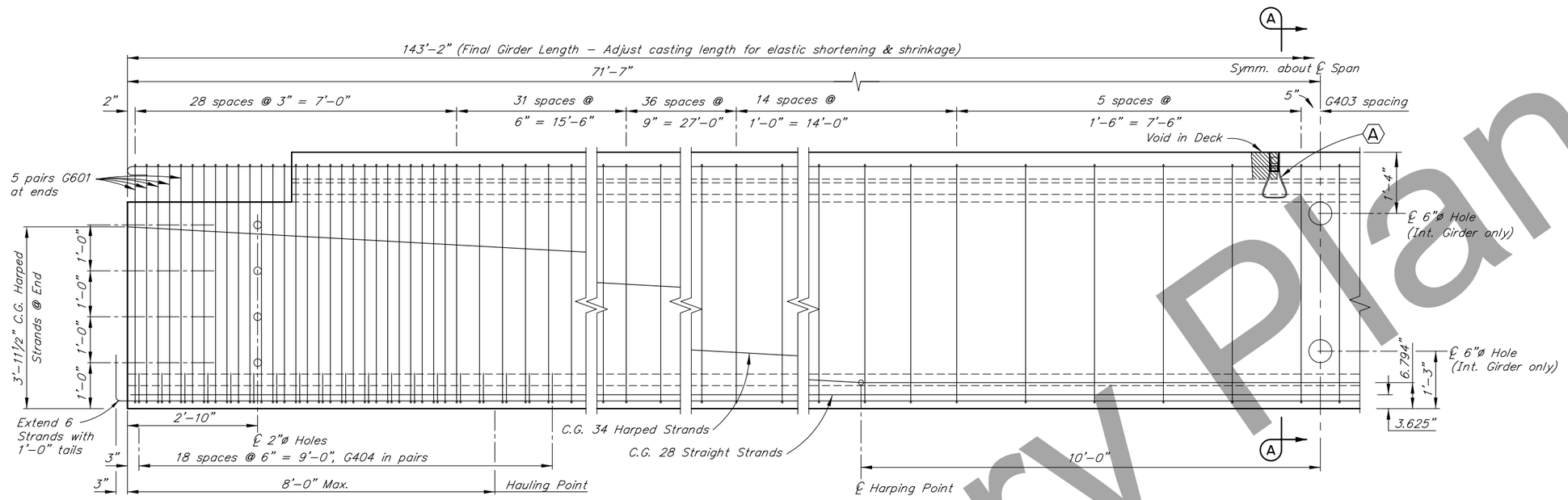

ELEVATION

12 6 0 1 2 3
In. Feet

REINFORCING STEEL-ONE GIRDER

MARK	NOTE	SIZE	NO.	LENGTH	TYPE
G401	E	4	211	VARIES	BENT
G401X	E	4	241	VARIES	BENT
G402	E,S	4	8	137'-2"	---
G402X	E,S	4	8	137'-2"	---
G403	E	4	440	6'-8"	BENT
G404	E	4	76	3'-3"	BENT
G501	E	5	211	VARIES	---
G501X	E	5	241	VARIES	BENT
G502	E,S	5	8	144'-4"	BENT
G502X	E,S	5	8	144'-4"	BENT
G601	E	6	20	6'-8"	BENT
C401	E,L,X	4	98	4'-5"	BENT
C501	E,S,X	5	2	145'-8"	---

BENDING DIAGRAM

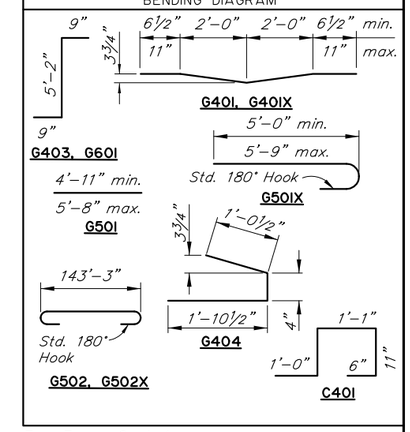

E – Epoxy-Coated
L – Ship 6 loose for diaphragm
S – Length does not include splices. Minimum lap splice length for splices shall be: 2'-0" for #4 bars, 2'-6" for #5 bars.
X – Exterior Girders only

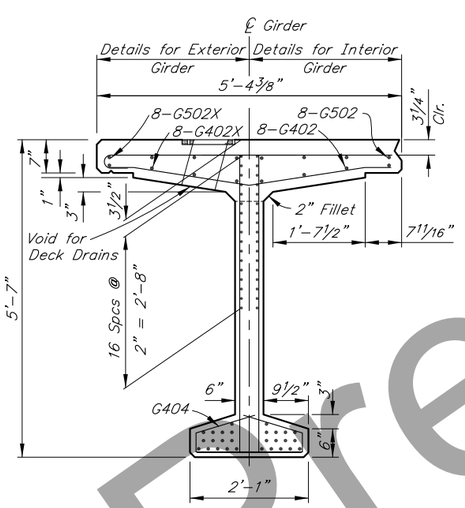

END VIEW

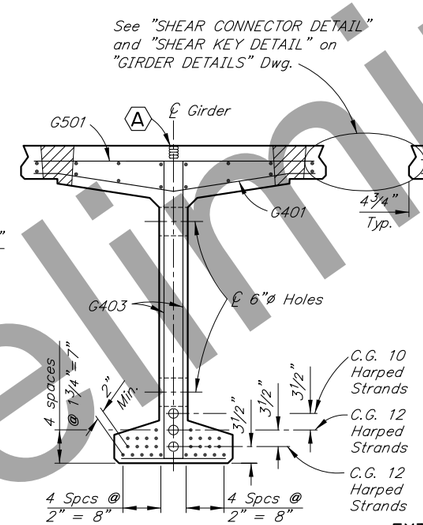

SECTION A-A

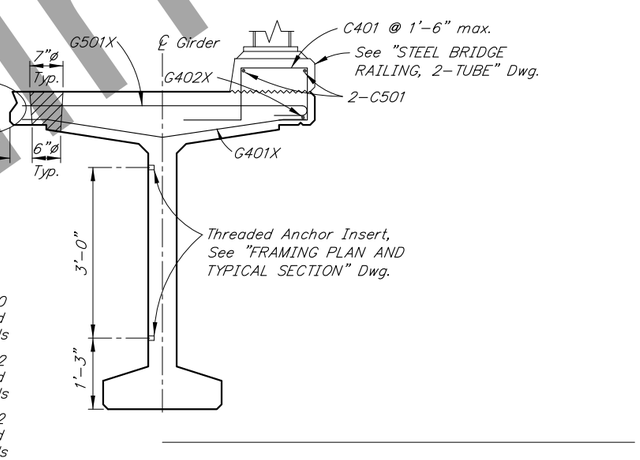

EXTERIOR GIRDER NEAR MID SPAN
(Unrelated Reinforcement not shown)

GIRDER NOTES

Class P Concrete: at Stress Transfer.....f'ci = 6,500 psi
at 28 Days.....f'c = 8,000 psi

½"ø low-relaxation prestressing strands with an ultimate strength of 270 ksi and a cross sectional area of 0.153 in².

Steel stresses: Pretensioning – Jacking Stress 189 ksi
After initial losses 171 ksi
After all losses 141 ksi

One inch clear cover on reinforcing steel unless otherwise noted.

See "FRAMING PLAN AND TYPICAL SECTION" Dwg. for Shear Connector spacing.

Deflect forms to compensate for camber and roadway profile grade.

Galvanize structural steel embedded in girders except for shear connectors.

Omit Shear Key, Shear Key Connector and Deck Void in exterior face of exterior girders.

Cast ends of girders plumb with respect to roadway grade. Install web holes and web anchor inserts parallel to ℄ bearing.

Finish top flange with heavy broom. Roughen the surface under the Curb.

(A) 1"X1'-0" Coil Anchor Insert for vertical adjustment of girders. Recess 2". Prevent concrete from filling hole.

Preliminary Plans

DESIGNED BY: Elmer Marx	CHECKED: Douglas Gelineau	PRELIMINARY PLAN	STATE OF ALASKA DEPARTMENT OF TRANSPORTATION AND PUBLIC FACILITIES BRIDGE SECTION 3132 Channel Drive Juneau, Alaska 99801 907-465-2975
DRAWN BY: Sam Sollie	CHECKED: Elmer Marx		
QUANTITIES BY: Elmer Marx	CHECKED: Douglas Gelineau		

CHOKOSNA RIVER BRIDGE

EDGERTON / MCCARTHY ROAD

GIRDERS

BRIDGE NO. 1193

DWG. NO. 9

R:\cad\1193\1193-1-GIRDERS Thu, May/21/20 08:14am

STATE	PROJECT DESIGNATION	YEAR	SHEET NO.	TOTAL SHEETS
ALASKA	NFHWY00125/0850028	2020	N10	N18

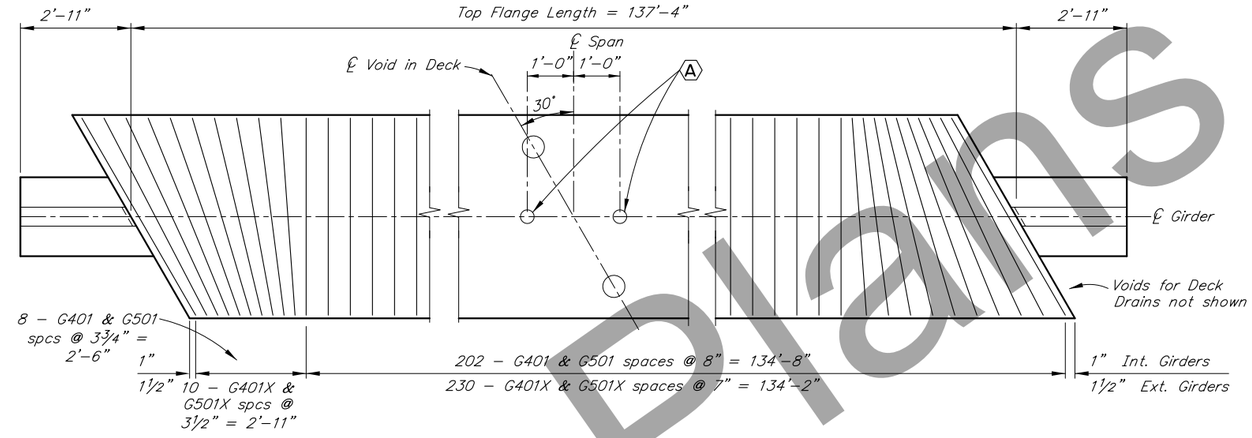

PLAN
No Scale

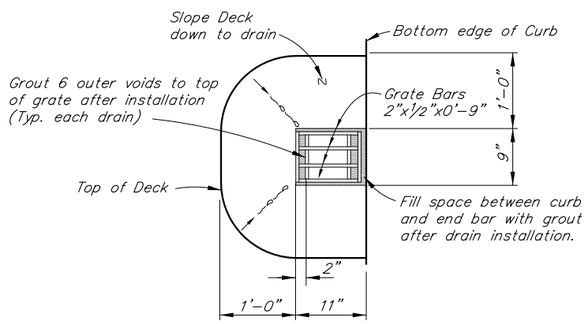

PLAN

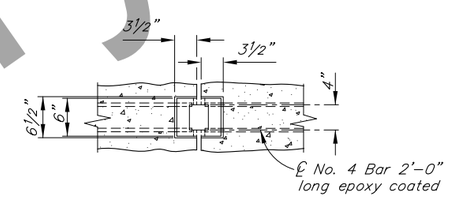

VIEW A-A

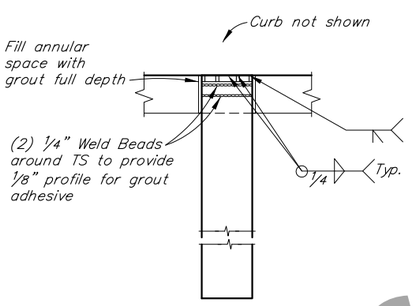

SECTION A-A

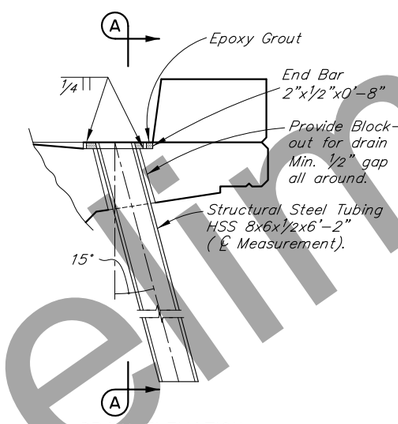

DRAIN ELEVATION

DECK DRAINS

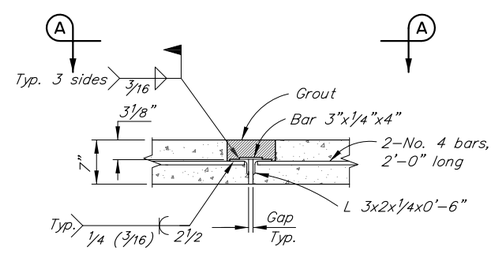

SHEAR CONNECTOR DETAIL

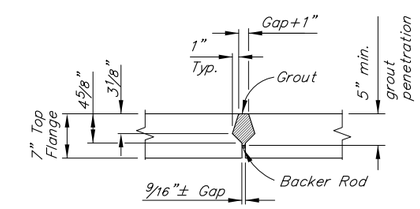

SHEAR KEY DETAIL

Preliminary Plans

DESIGNED BY: Elmer Marx	CHECKED: Douglas Gelineau	**PRELIMINARY PLAN**	STATE OF ALASKA **DEPARTMENT OF TRANSPORTATION AND PUBLIC FACILITIES** BRIDGE SECTION 3132 Channel Drive Juneau, Alaska 99801 907-465-2975
DRAWN BY: Sam Sollie	CHECKED: Elmer Marx		
QUANTITIES BY: Elmer Marx	CHECKED: Douglas Gelineau		

CHOKOSNA RIVER BRIDGE

EDGERTON / MCCARTHY ROAD

GIRDER DETAILS

BRIDGE NO. 1193

DWG. NO. 10

R:\cad\1193\1193-1-GIR DETAILS Thu, May/21/20 08:14am

STATE	PROJECT DESIGNATION	YEAR	SHEET NO.	TOTAL SHEETS
ALASKA	NFHWY00125/0850028	2020	N11	N18

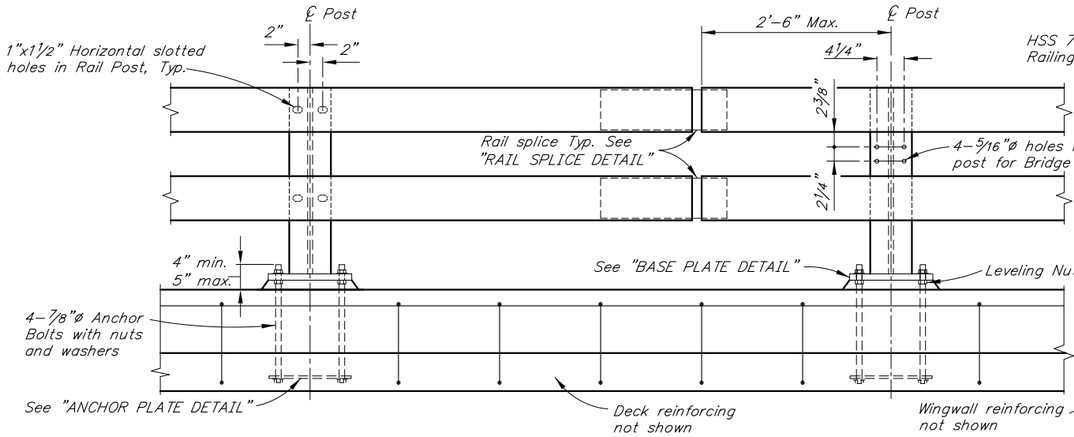

TYPICAL POST ELEVATION

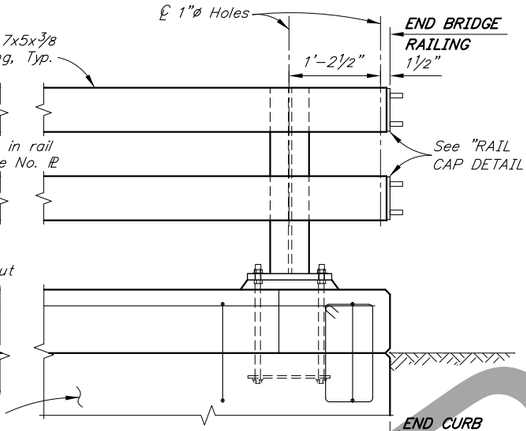

ELEVATION

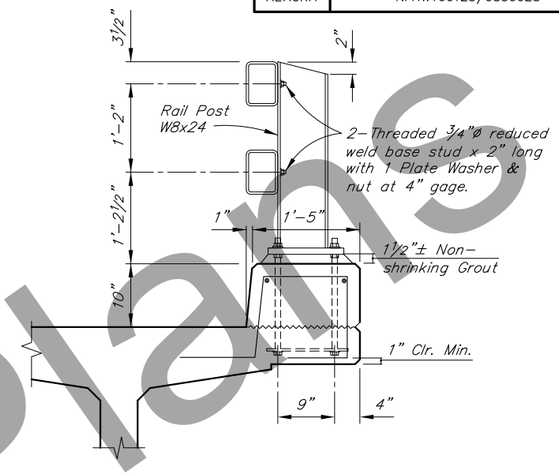

TYPICAL SECTION

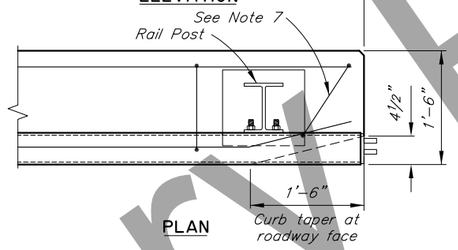

PLAN

EXPANSION JOINT

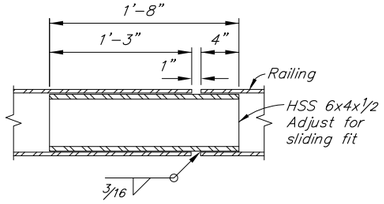

RAIL SPLICE DETAIL

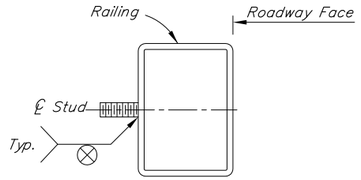

RAILING STUD DETAIL

END POST DETAIL

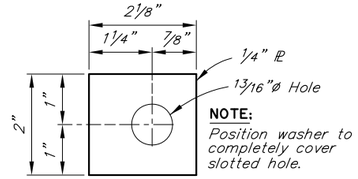

NOTE:
Position washer to completely cover slotted hole.

PLATE WASHER

No Scale

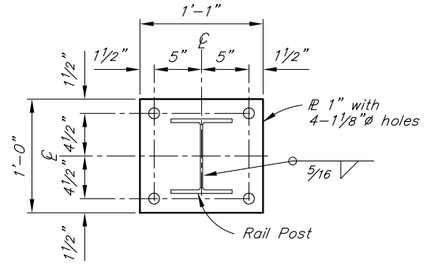

BASE PLATE DETAIL

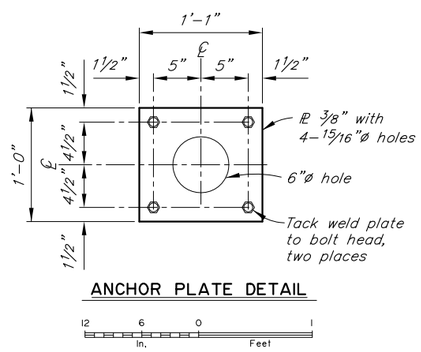

ANCHOR PLATE DETAIL

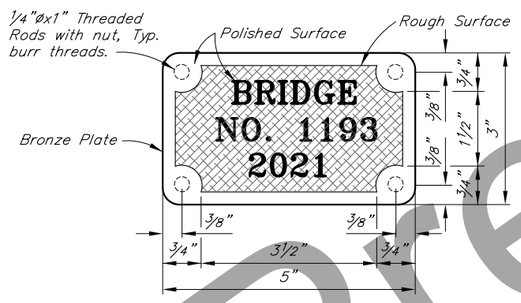

BRONZE BRIDGE NO. PLATE

No Scale

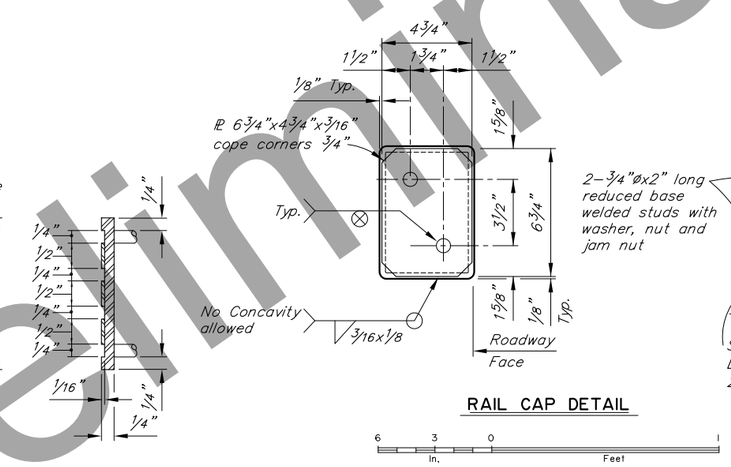

RAIL CAP DETAIL

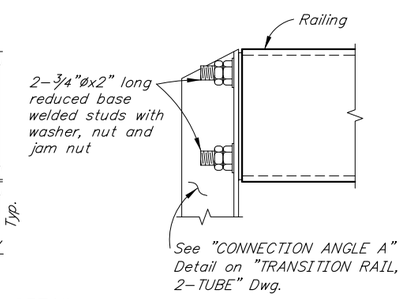

NOTES

1. Locate bridge number plates on right hand side of approaching traffic near each end as shown on General Layout Dwg. (2 total).
2. Furnish bridge number plates. Use "Century" type style lettering. Use studs and nuts that conform to UNS C65100 or C65500. Braze ¼"ø threaded rod to back of plate with nut – 4 required. Use tamper proof nuts.
3. Provide railing expansion joints at 50'-0" maximum intervals. Railing shall be continuous over 2 posts minimum. Railing expansion joints are required in rail panels that span bridge expansion joints.
4. Use grout with a minimum 24-hour f'c of 3000 psi in single placement.
5. See "FRAMING PLAN AND TYPICAL SECTION" Dwg. for rail post spacing.
6. Install bridge rail posts plumb.
7. Adjust reinforcing to accommodate curb taper.

Preliminary Plans

DESIGNED BY: Elmer Marx	CHECKED: Douglas Gelineau	**PRELIMINARY PLAN**	STATE OF ALASKA DEPARTMENT OF TRANSPORTATION AND PUBLIC FACILITIES BRIDGE SECTION 3132 Channel Drive Juneau, Alaska 99801 907-465-2975
DRAWN BY: Sam Sollie	CHECKED: Elmer Marx		
QUANTITIES BY: Elmer Marx	CHECKED: Douglas Gelineau		

CHOKOSNA RIVER BRIDGE

EDGERTON / MCCARTHY ROAD

STEEL BRIDGE RALING, 2-TUBE

BRIDGE NO. 1193

DWG. NO. 11

R:\cad\1193\1193-1-RAIL Thu, May/21/20 08:14am

STATE	PROJECT DESIGNATION	YEAR	SHEET NO.	TOTAL SHEETS
ALASKA	NFHWY00125/0850028	2020	N12	N18

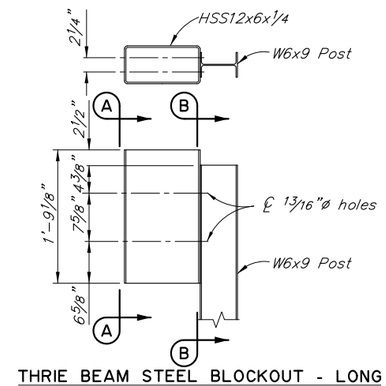

THRIE BEAM STEEL BLOCKOUT - LONG

See Note 4 for additional details

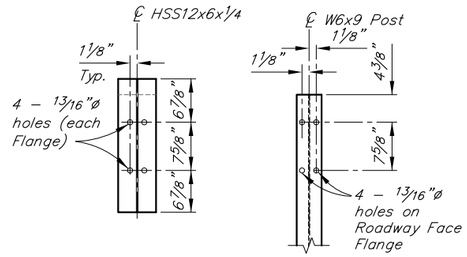

VIEW A-A

SECTION B-B

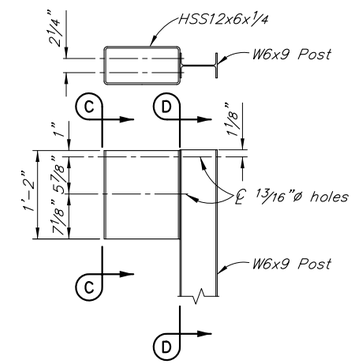

THRIE BEAM STEEL BLOCKOUT - SHORT

See Note 4 for additional details

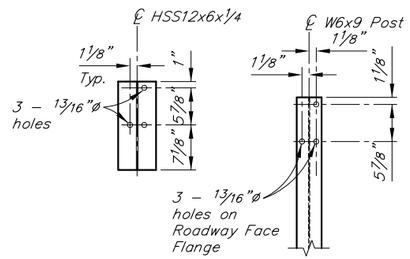

VIEW C-C

SECTION D-D

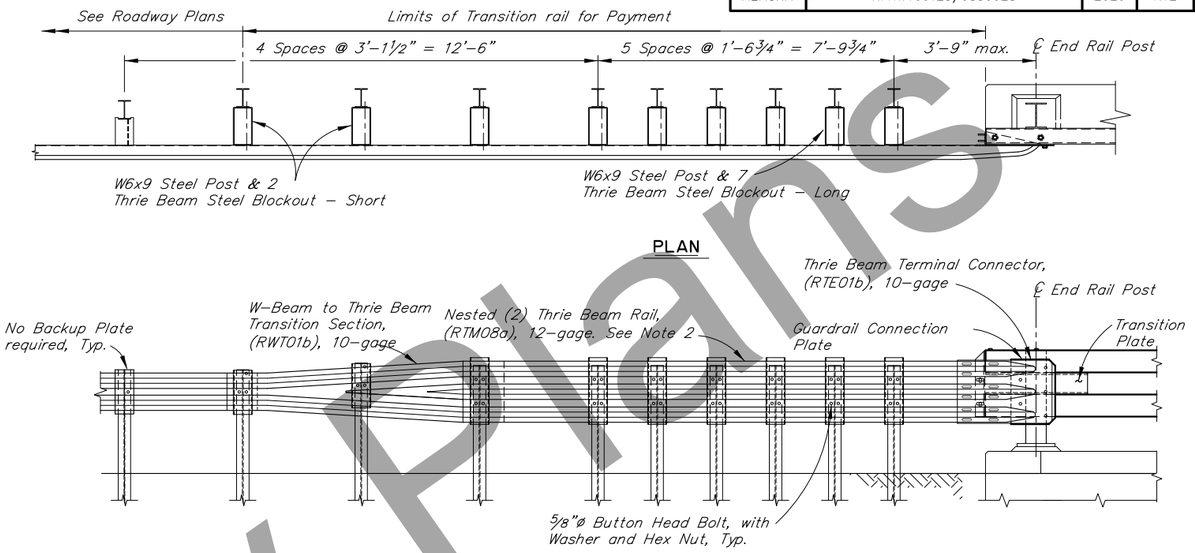

PLAN

ELEVATION

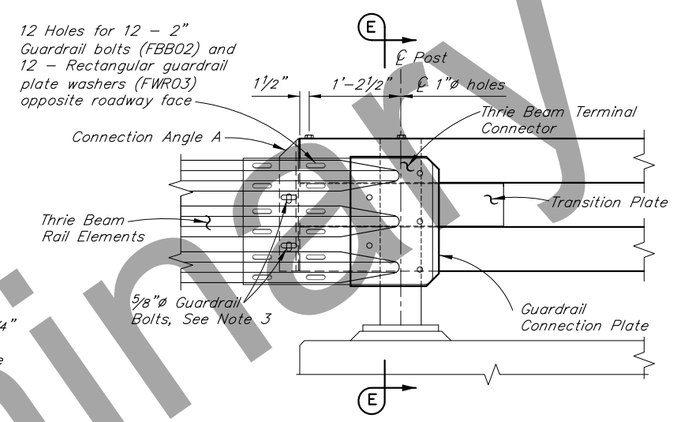

TRANSITION CONNECTION - ELEVATION

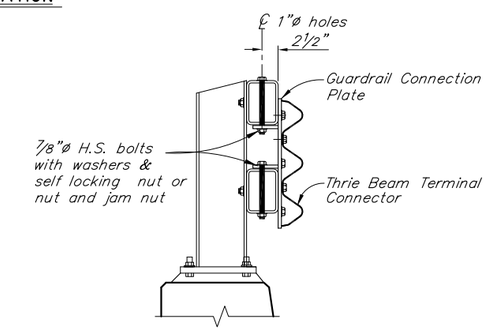

SECTION E-E

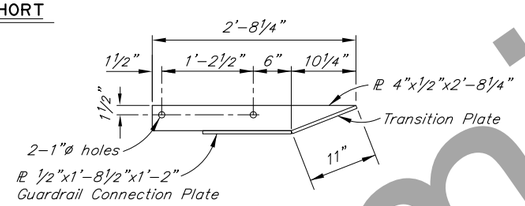

VIEW F-F

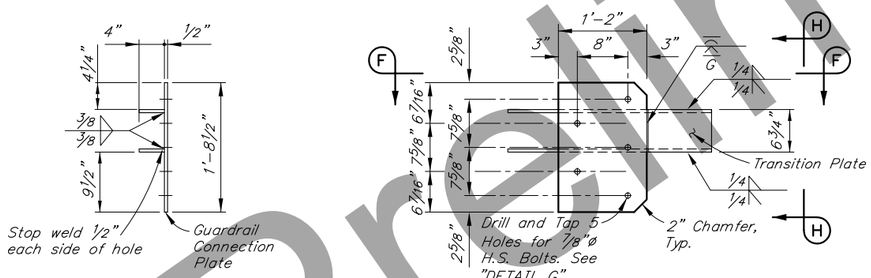

SECTION H-H

ELEVATION

GUARDRAIL CONNECTION PLATE DETAILS

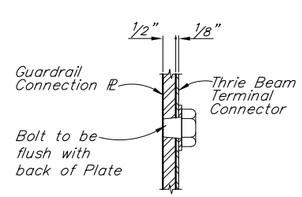

DETAIL G

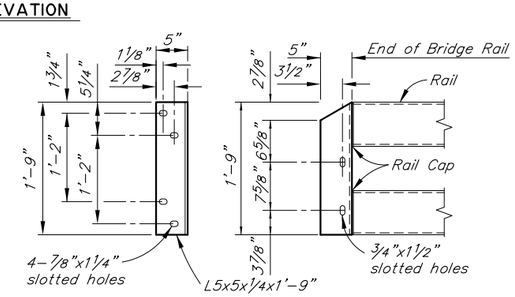

END VIEW

ELEVATION

CONNECTION ANGLE A

No Scale

NOTES:

1. All guardrail and guardrail connection hardware to conform to AASHTO M 180. Use H.S. Bolts conforming to ASTM A325. All other steel conforms to ASTM A709 Grade 50.
2. Lap approach guardrail to prevent snags from oncoming traffic.
3. Provide 4 1/2" horizontal slots in approach guardrail. Adjust guardrail bolts for sliding fit.
4. Conform to G-00, G-05S and G-10 of the Standard Plans for all guardrail details not shown.

Preliminary Plans

DESIGNED BY: Elmer Marx	CHECKED: Douglas Gelineau	PRELIMINARY PLAN	STATE OF ALASKA DEPARTMENT OF TRANSPORTATION AND PUBLIC FACILITIES BRIDGE SECTION 3132 Channel Drive Juneau, Alaska 99801 907-465-2975
DRAWN BY: Sam Sollie	CHECKED: Elmer Marx		
QUANTITIES BY: Elmer Marx	CHECKED: Douglas Gelineau		

CHOKOSNA RIVER BRIDGE

EDGERTON / MCCARTHY ROAD

TRANSITION RAIL, 2-TUBE

BRIDGE NO. 1193

DWG. NO. 12

R:\cad\1193\1193-1-TRANSITION Thu, May/21/20 08:20am

STATE	PROJECT DESIGNATION	YEAR	SHEET NO.	TOTAL SHEETS
ALASKA	NFHWY00125	2020	N13	N18

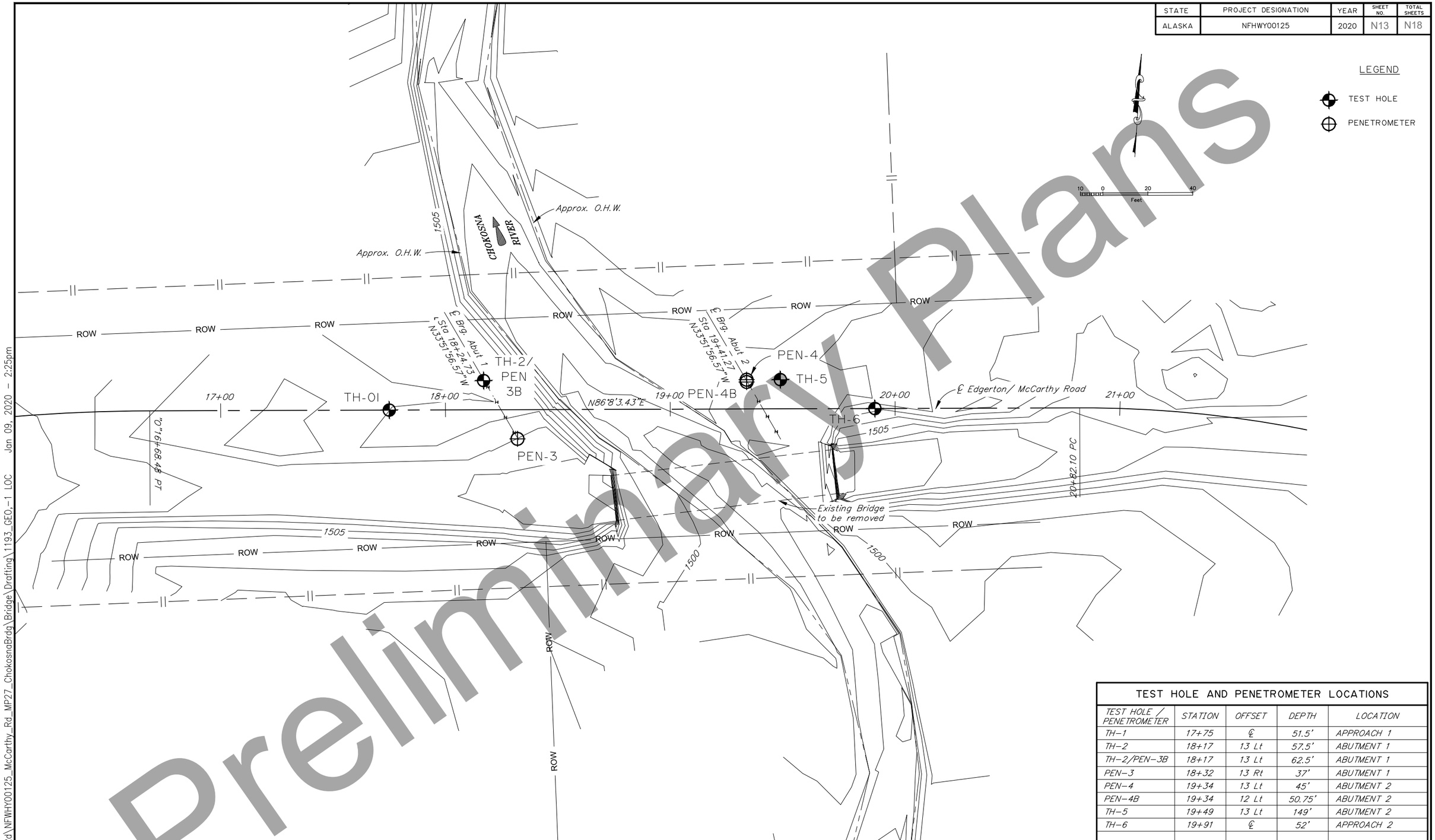

TEST HOLE AND PENETROMETER LOCATIONS

TEST HOLE / PENETROMETER	STATION	OFFSET	DEPTH	LOCATION
TH-1	17+75	℄	51.5'	APPROACH 1
TH-2	18+17	13 Lt	57.5'	ABUTMENT 1
TH-2/PEN-3B	18+17	13 Lt	62.5'	ABUTMENT 1
PEN-3	18+32	13 Rt	37'	ABUTMENT 1
PEN-4	19+34	13 Lt	45'	ABUTMENT 2
PEN-4B	19+34	12 Lt	50.75'	ABUTMENT 2
TH-5	19+49	13 Lt	149'	ABUTMENT 2
TH-6	19+91	℄	52'	APPROACH 2

DESIGNED BY: D. Hemstreet	CHECKED: Engineer		
DRAWN BY: R. Angell	CHECKED: J. Nicolazzo		
QUANTITIES BY: Engineer	CHECKED: Engineer		

STATE OF ALASKA
DEPARTMENT OF TRANSPORTATION AND PUBLIC FACILITIES
STATEWIDE MATERIALS

STATE OF ALASKA 49TH
David A. Hemstreet
No. CE 9800
REGISTERED PROFESSIONAL ENGINEER

CHOKOSNA RIVER BRIDGE

EDGERTON / MCCARTHY ROAD

TEST HOLE & PENETROMETER LOCATION

BRIDGE NO. 1193
DWG. NO. 13

H:\Projects\McCarthy_Rd\NFWHY00125_McCarthy_Rd_MP27_ChokosnaBrdg\Bridge\Drafting\1193_GEO,-1 LOC Jan 09, 2020 - 2:25pm

STATE	PROJECT DESIGNATION	YEAR	SHEET NO.	TOTAL SHEETS
ALASKA	NFHWY00125	2020	N14	N18

TYPICAL TEST HOLE LOG

DATE: Date begun – Date completed
STATION / OFFSET: XX+XX FEET RT or LT

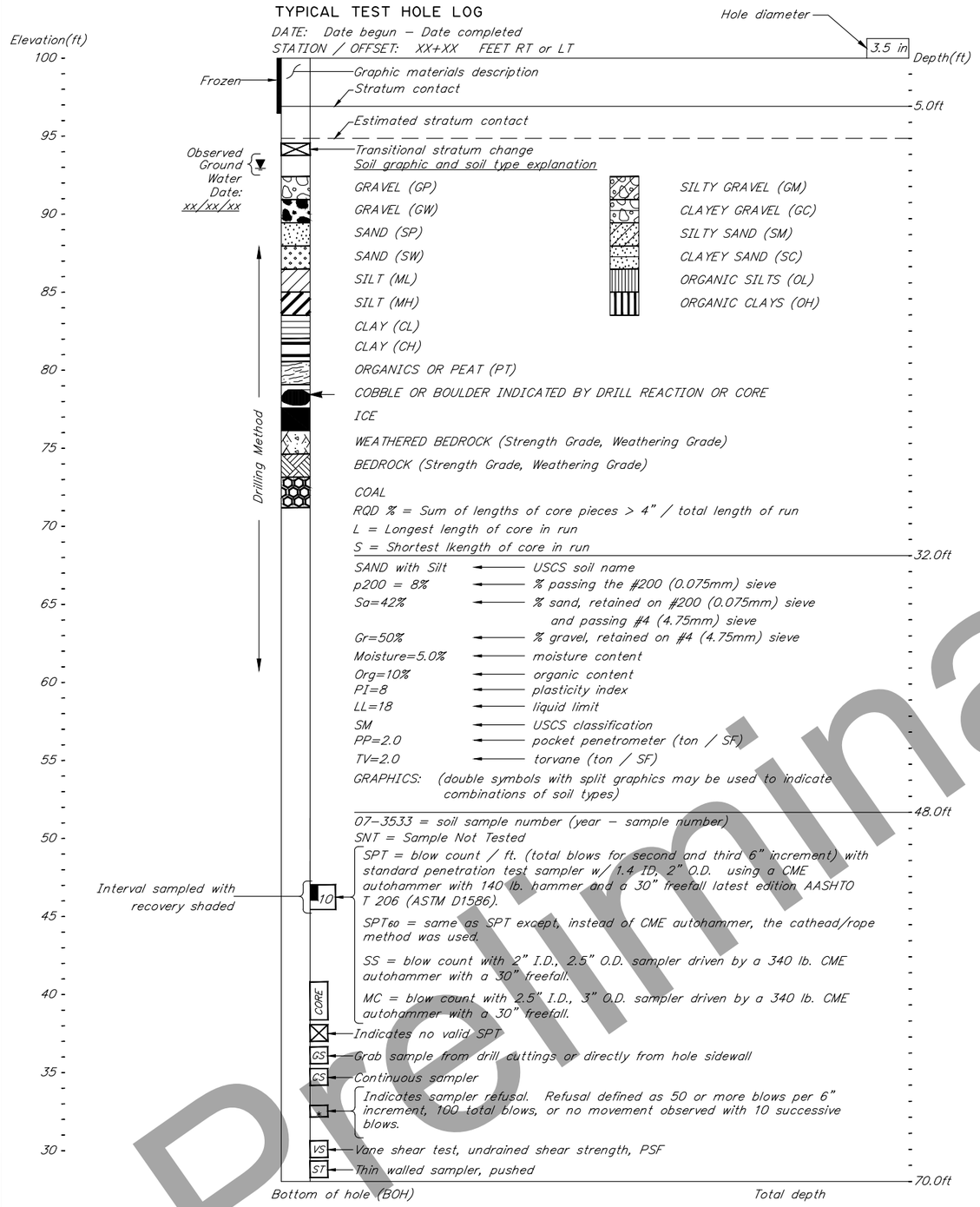

NOTES:

1) The test hole logs depicted graphically in these drawings are distillations of the original field logs, based on post–field investigation review and analysis. These drafted logs include changes made to field descriptions based upon laboratory test data, review and analysis. Detailed field observations of rock and soil sampled during the drilling program are not reproduced in the drafted logs.
2) Description of soils follows Alaska Geotechnical Procedures manual. Classification of soils follows Unified Soil Classification System (ASTM D2487).
3) The test hole logs from these sheets are an integral part of the Foundation Geology Report. See Construction Contract Bid Documents – invitation to bid/notice to bidders. Important information about the test hole logs and the foundation investigation is contained in the report. The test hole logs are not severable from and cannot be completely and correctly interpreted without reference to the Foundation Geology Report.

TYPICAL PENETROMETER TEST LOG

DATE: Date begun – Date completed
STATION / OFFSET: XX+XX / RT or LT (feet)

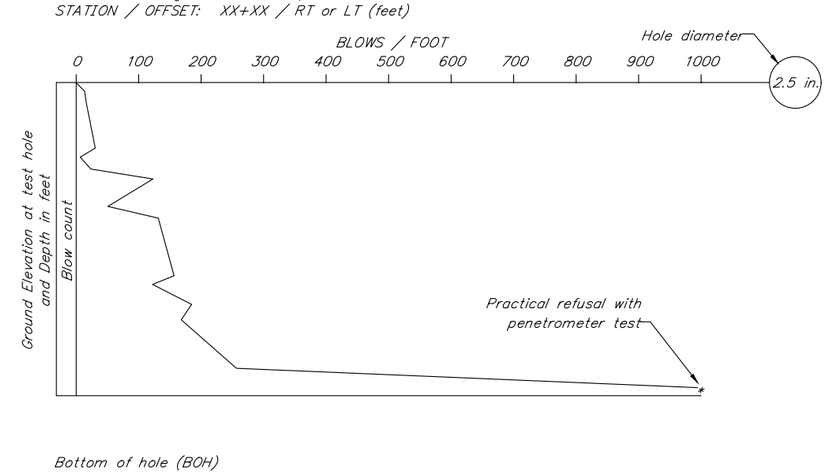

NOTES:
Penetrometer W/2.5" O.D., with a CME AUTOMATIC Hammer using a 340 lb. weight and a 30" freefall

Preliminary Plans

DESIGNED BY: D. Hemstreet	CHECKED: Engineer		
DRAWN BY: R. Angell	CHECKED: J. Nicolazzo		
QUANTITIES BY: Engineer	CHECKED: Engineer		

STATE OF ALASKA
DEPARTMENT OF TRANSPORTATION AND PUBLIC FACILITIES
STATEWIDE MATERIALS

STATE OF ALASKA 49TH — David A. Hernstreet No. CE 9800 — REGISTERED PROFESSIONAL ENGINEER

CHOKOSNA RIVER BRIDGE

EDGERTON / MCCARTHY ROAD

TEST HOLE & PENETROMETER LEGEND

BRIDGE NO. 1193
DWG. NO. 14

H:\Projects\McCarthy_Rd\NFWHY00125_McCarthy_Rd_MP27_ChokosnaBrdg\Bridge\Drafting\1193_GEO,-2 TYP Jan 09, 2020 – 2:25pm

STATE	PROJECT DESIGNATION	YEAR	SHEET NO.	TOTAL SHEETS
ALASKA	NFHWY00125	2020	N15	N18

TH-1

Date: 4/23/19
Station: 17+75 Offset: CL
Elev. = 1505 ft.

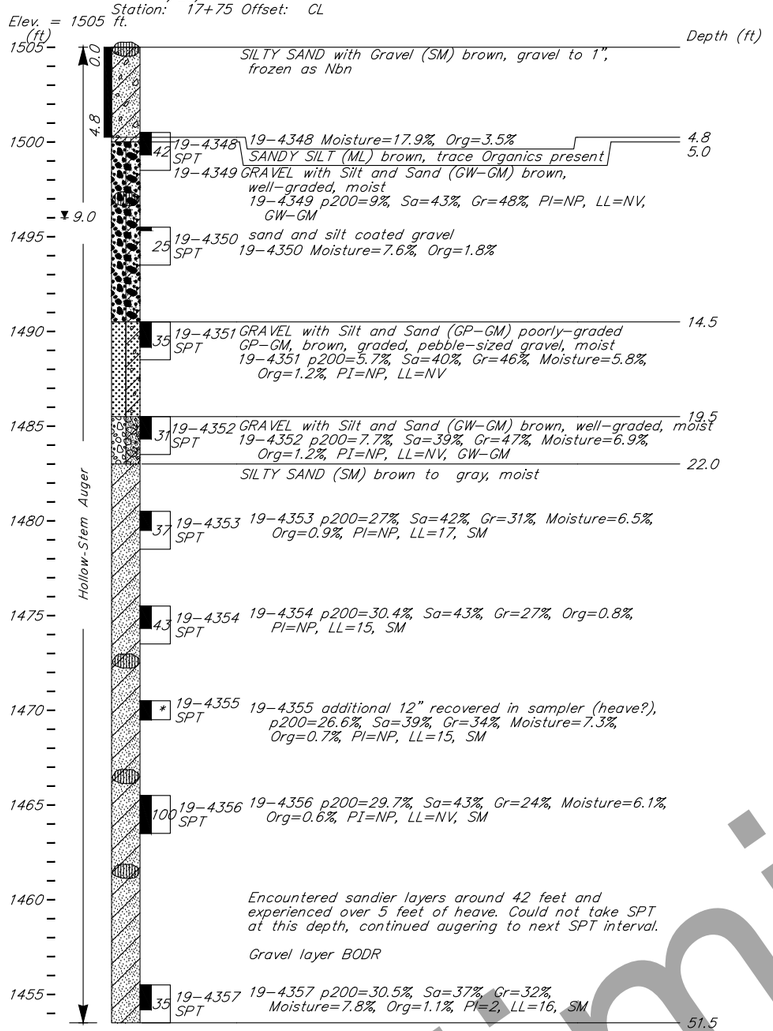

B.O.H. 51.5 ft.
BODR = based on drill reaction
Hammer: CME Auto Hammer 140 lb hammer
Equipment: CME 850
Drilling Method: 6.5" Hollow Auger
Geologist: J. SIMPSON
Latitude: 61.45539 Longitude: −143.76483

TH-2

Date: 4/28/19
Station: 18+17 Offset: 13Lt
Elev. = 1506 ft.

B.O.H. 57.5 ft. Notes: Gravel layer from 56 to 57.5 feet bgs caused hole to cave, could not advance casing beyond boulders encountered above this layer: REFUSAL. Continued test hole with penetrometer.
BODR = based on drill reaction
Hammer: CME Auto Hammer 140 lb hammer
Equipment: CME 850
Drilling Method: 6.5" Hollow Auger
Geologist: J. SIMPSON
Latitude: 61.45542 Longitude: −143.76462

BOH: 63.5 ft
Notes: Penetrometer continuation of TH-2 after REFUSAL
Hammer: CME Auto Hammer 340 lb hammer
Equipment: CME 850
Drilling Method: Penetrometer

Preliminary Plans

DESIGNED BY: D. Hemstreet	CHECKED: Engineer		
DRAWN BY: R. Angell	CHECKED: J. Nicolazzo		
QUANTITIES BY: Engineer	CHECKED: Engineer		

STATE OF ALASKA
DEPARTMENT OF TRANSPORTATION AND PUBLIC FACILITIES
STATEWIDE MATERIALS

STATE OF ALASKA 49TH
David A. Hemstreet No. CE 9800
REGISTERED PROFESSIONAL ENGINEER

CHOKOSNA RIVER BRIDGE

EDGERTON / MCCARTHY ROAD

TEST HOLE & PENETROMETER LOGS

BRIDGE NO. 1193
DWG. NO. 15

H:\Projects\McCarthy_Rd\NFWHY00125_McCarthy_Rd_MP27_ChokosnaBrdg\Bridge\Drafting\1193_GEO_-3 TH-1&2 Jan 09, 2020 - 2:26pm

STATE	PROJECT DESIGNATION	YEAR	SHEET NO.	TOTAL SHEETS
ALASKA	NFHWY00125	2020	N16	N18

PEN 3

Date: 4/24/19
Station: 18+32 Offset: 13Rt

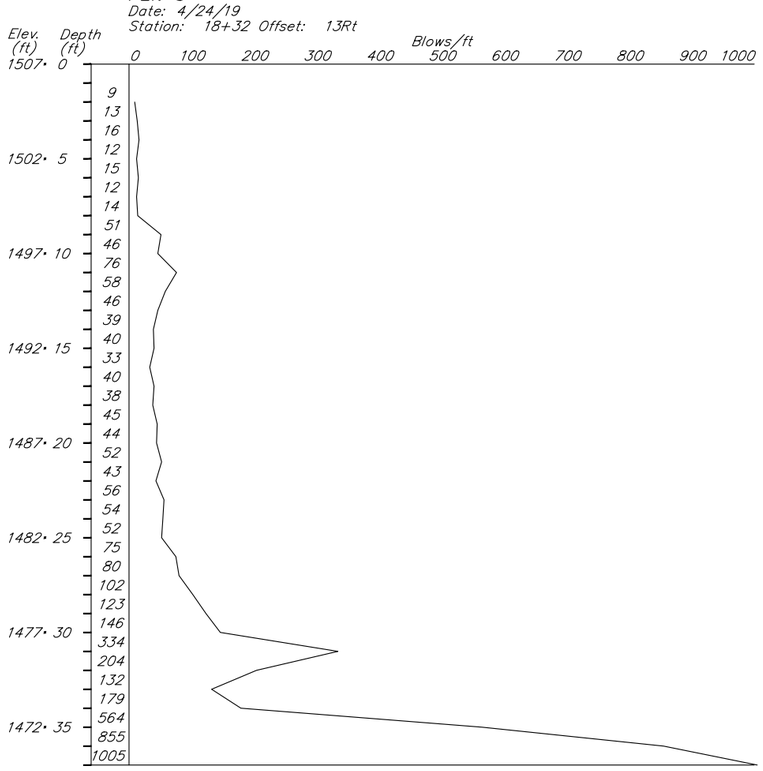

BOH: 37 ft

Hammer: CME Auto Hammer 340 lb hammer
Equipment: CME 850
Drilling Method: Penetrometer
Geologist: J. SIMPSON
Latitude: 61.45536 Longitude: −143.76451

PEN 4B

Date: 5/1/19
Station: 19+34 Offset: 12Lt

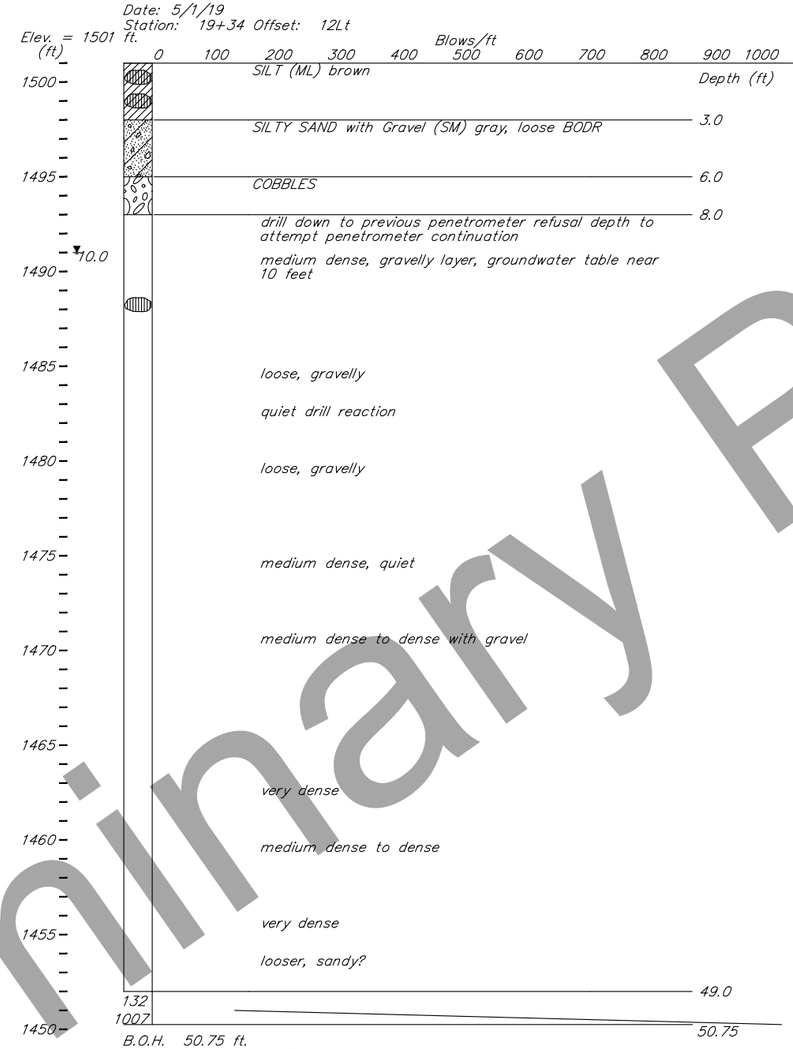

B.O.H. 50.75 ft.
Notes: Predrilled to 49 ft. No samples taken but drill reaction noted.
Approximately 1 foot from first attempt; PEN 4.
BODR = based on drill reaction
Hammer: CME Auto Hammer 340 lb hammer
Equipment: CME 850
Drilling Method: Penetrometer
Geologist: J. SIMPSON
Latitude: 61.45733 Longitude: −143.76335

PEN 4

Date: 4/17/19
Station: 19+34 Offset: 13Lt

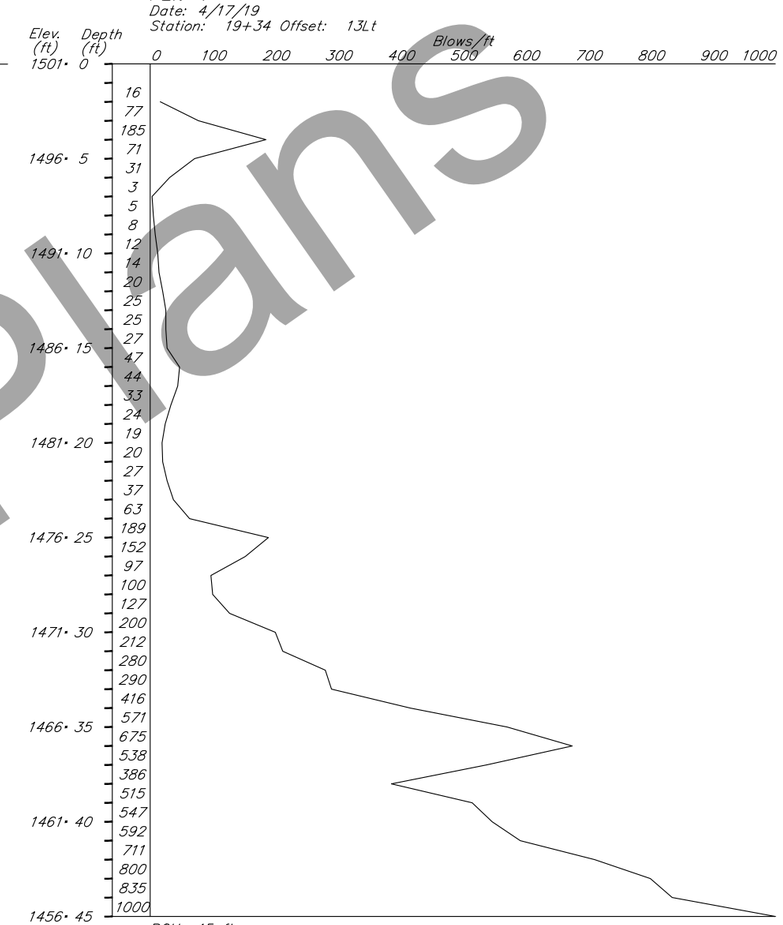

BOH: 45 ft

Hammer: CME Auto Hammer 340 lb hammer
Equipment: CME 850
Drilling Method: Penetrometer
Geologist: G. SPEETER
Latitude: 61.45544 Longitude: −143.76393

Preliminary Plans

DESIGNED BY: D. Hemstreet	CHECKED: Engineer		
DRAWN BY: R. Angell	CHECKED: J. Nicolazzo		
QUANTITIES BY: Engineer	CHECKED: Engineer		

STATE OF ALASKA
DEPARTMENT OF TRANSPORTATION AND PUBLIC FACILITIES
STATEWIDE MATERIALS

STATE OF ALASKA 49TH David A. Hemstreet No. CE 9800 REGISTERED PROFESSIONAL ENGINEER

CHOKOSNA RIVER BRIDGE

EDGERTON / MCCARTHY ROAD

TEST HOLE & PENETROMETER LOGS

BRIDGE NO. 1193
DWG. NO. 16

H:\Projects\McCarthy_Rd\NFWHY00125_McCarthy_Rd_MP27_ChokosnaBrdg\Bridge\Drafting\1193_GEO_-4 PEN-3&4 Jan 09, 2020 – 2:26pm

STATE	PROJECT DESIGNATION	YEAR	SHEET NO.	TOTAL SHEETS
ALASKA	NFHWY00125	2020	N17	N18

TH-5

Date: 4/18/19
Station: 19+49 Offset: 13Lt
Elev. = 1500 ft.

Hollow-Stem Auger; Tri-cone @ Casing

Elev. (ft)	Depth (ft)	Sample	Description
1500			SILT (ML) brown, moist to wet
	2.0		COBBLES
	2.5		SAND with Silt and Gravel (SW-SM) brown, well-graded, moist, cobbles present
1495		* 19-4300 SPT 19-4301	19-4300 p200=7.8%, Sa=48%, Gr=46%, PI=NP, LL=NV, SW-SM; 19-4301 Moisture=8%, Org=1.1%
	4.0		SAND (SW) gray to brown, well-graded, moist to wet, loose BODR, heaving
1490		19-4302 40 19-4303 SPT	19-4302 Moisture=11.8%, Org=0.9%
	8.0		GRAVEL with Silt and Sand (GW-GM) brown, well-graded
	10.3		SAND with Silt and Gravel (SW-SM) brown, well-graded
1485		15* 19-4304 19-4305 SPT* 39	19-4303 p200=7.7%, Sa=40%, Gr=52%, PI=NP, LL=NV, GW-GM; 19-4304 p200=9.3%, Sa=48%, Gr=43%, PI=NP, LL=NV, SW-SM; 19-4305 Moisture=6.9%, Org=0%
	15.0		brown to gray, less gravel
			finer sand
1480	20.0	77 19-4306 19-4307 SPT	SILTY SAND with Gravel (SM) gray to brown, gravelly layers; 19-4306 Moisture=5.4%, Org=1.6%; 19-4307 p200=19.9%, Sa=46%, Gr=34%, PI=NP, LL=15, SM
1475	25.0	63 19-4308 19-4309 SPT	SANDY CLAY (CL) gray to brown, trace gravel; 19-4308 Moisture=9.7%, Org=1.9%; 19-4309 p200=50.6%, Sa=36%, Gr=23%, PI=14, LL=27, CL
1470	30.0	89 19-4310 19-4311 SPT	CLAYEY GRAVEL with Sand (GC) gray to brown, with pebble-sized gravel, and boulders; 19-4310 Moisture=10.3%, Org=1.2%; 19-4311 p200=38.9%, Sa=19%, Gr=42%, PI=14, LL=28, GC
	33.0	* 19-4312 SPT 19-4313	12" boulder; CLAYEY SAND with Gravel (SC) gray to brown; 19-4312 p200=46.2%, Sa=30%, Gr=24%, PI=13, LL=26, SC; 19-4313 Moisture=9.1%, Org=1.2%
1465		88 19-4314 SPT 19-4315	19-4314 p200=23.4%, Sa=52%, Gr=25%, PI=10, LL=22, SC
	39.0		SILTY SAND (SM) gray, moist, clayey layers; 19-4315 Moisture=17.2%, Org=2.2%
1460		73 19-4316 SPT 19-4317	wet; 19-4316 p200=36.8%, Sa=60%, Gr=3%, PI=NP, LL=NV, SM; 19-4317 Moisture=25.2%, Org=1.6%
1455		* 19-4318 SPT 19-4319	19-4318 p200=35.5%, Sa=62%, Gr=2%, PI=NP, LL=NV, SM; 19-4319 Moisture=27%, Org=1.1%
1450			
1445		47 19-4320 SPT	19-4320 p200=35.5%, Sa=56%, Gr=8%, PI=9, LL=37, SM
1440	59.0		

TH-5 (cont)

Date: 4/18/19
Station: 19+49 Offset: 13Lt
Elev. = 1500 ft.

Tri-cone @ Casing

Elev. (ft)	Depth (ft)	Sample	Description
1440			19-4321 SILT (ML) gray, wet; 19-4322 19-4321 Moisture=30.4%, Org=2.2%; 19-4322 p200=88.9%, Sa=11%, PI=NP, LL=28, ML
		46 19-4323 SPT 19-4324	2" clayey layer; 19-4323 Moisture=33.8%, Org=4%; 19-4324 p200=87.5%, Sa=11%, Gr=1%, PI=11, LL=36, ML
1435			clayey layers and occasional gravel
		46 19-4325 SPT 19-4326	19-4325 p200=94.1%, Sa=6%, PI=19, LL=47, ML; 19-4326 Moisture=31.5%, Org=2.7%
1430	72.0		CLAY (CL) gray, wet, thin sandy layers
		42 19-4327 SPT 19-4328	19-4327 p200=93.4%, Sa=7%, PI=15, LL=40, CL; 19-4328 Moisture=35%, Org=3.3%
1425			sandy layers, occasional gravel
1420	79.5		SILTY SAND (SM) gray, trace gravel
		63 19-4329 SPT 19-4330	moist to wet; 19-4329 p200=25.8%, Sa=71%, Gr=3%, PI=NP, LL=NV, SM; 19-4330 Moisture=15%, Org=0.9%
1415			
1410			trace gravel
1405		* 19-4331 SPT 19-4332	moist to wet; 19-4331 p200=34.0%, Sa=66%, PI=NP, LL=NV, SM; 19-4332 Moisture=14.6%, Org=0.8%
1400	99.0		SILTY SAND with Gravel (SM) gray to brown, moist
		44 19-4333 SPT	9" heave (10" recovery, most likely all heave); 19-4333 p200=12.1%, Sa=46%, Gr=42%, Moisture=5.3%, Org=0.8%, PI=NP, LL=NV, SM
1395			increase in gravel
1390	112.0		SILTY SAND (SM) gray, major heaving
		* 19-4358 SPT 19-4359	sand liquefies when agitated, 2" clayey layer at bottom of sample; 19-4358 p200=22.3%, Sa=69%, Gr=9%, PI=NP, LL=NV, SM; 19-4359 Moisture=9.7%, Org=0.8%
1385			
1380			gravelly layers

TH-5 (cont)

Date: 4/18/19
Station: 19+49 Offset: 13Lt
Elev. = 1500 ft.

Tri-cone @ Casing

Elev. (ft)	Depth (ft)	Sample	Description
1380		* 19-4360 SPT	SAND with Silt (SW-SM) gray, well-graded, moist; 19-4360 p200=9.5%, Sa=80%, Gr=10%, Moisture=9.4%, Org=0.9%, PI=NP, LL=NV, SW-SM
	123.0		SANDY CLAY (CL) gray
	124.2		CLAYEY SAND (SC) gray, occasional gravel
1375	126.0		
1370		* SPT	cuttings are sand w/ clayey clumps rock in shoe of spoon, no recovery
1365			
	138.3	* 19-4361 SPT	SILTY SAND (SM) gray, moist to wet; 19-4361 p200=29.6%, Sa=69%, Gr=1%, Moisture=13.4%, Org=0.9%, PI=NP, LL=NV, SM
1360			
1355			
	147.0	* 19-4362 SPT	SILTY SAND with Gravel (SM) gray, moist; 19-4362 p200=19.1%, Sa=82%, Gr=37%, Moisture=6%, Org=0.8%, PI=NP, LL=16, SM
	149.0		

B.O.H. 149 ft.
Notes: Drillers did not switch hammer for 15' SPT, repeated SPT at 17' with correct hammer and did not take additional samples as soil was consistent with previous SPT.
Hammer: CME Auto Hammer 140 lb hammer
Equipment: CME 850
Drilling Method: Tricone
Geologist: J. SIMPSON
Latitude: 61.4554 Longitude: -143.76382

Preliminary Plans

DESIGNED BY: D. Hemstreet	CHECKED: Engineer		
DRAWN BY: R. Angell	CHECKED: J. Nicolazzo		
QUANTITIES BY: Engineer	CHECKED: Engineer		

STATE OF ALASKA
DEPARTMENT OF TRANSPORTATION AND PUBLIC FACILITIES
STATEWIDE MATERIALS

STATE OF ALASKA 49TH David A. Hemstreet No. CE 9800 REGISTERED PROFESSIONAL ENGINEER

CHOKOSNA RIVER BRIDGE

EDGERTON / MCCARTHY ROAD

TEST HOLE & PENETROMETER LOGS

BRIDGE NO. 1193
DWG. NO. 17

H:\Projects\McCarthy_Rd\NFWHY00125_McCarthy_Rd_MP27_ChokosnaBrdg\Bridge\Drafting\1193_GEO_-5 TH-5 Jan 09, 2020 - 2:26pm

STATE	PROJECT DESIGNATION	YEAR	SHEET NO.	TOTAL SHEETS
ALASKA	NFHWY00125	2020	N18	N18

TH-6

Date: 4/22/19
Station: 19+91 Offset: CL
Elev. = 1503 ft.

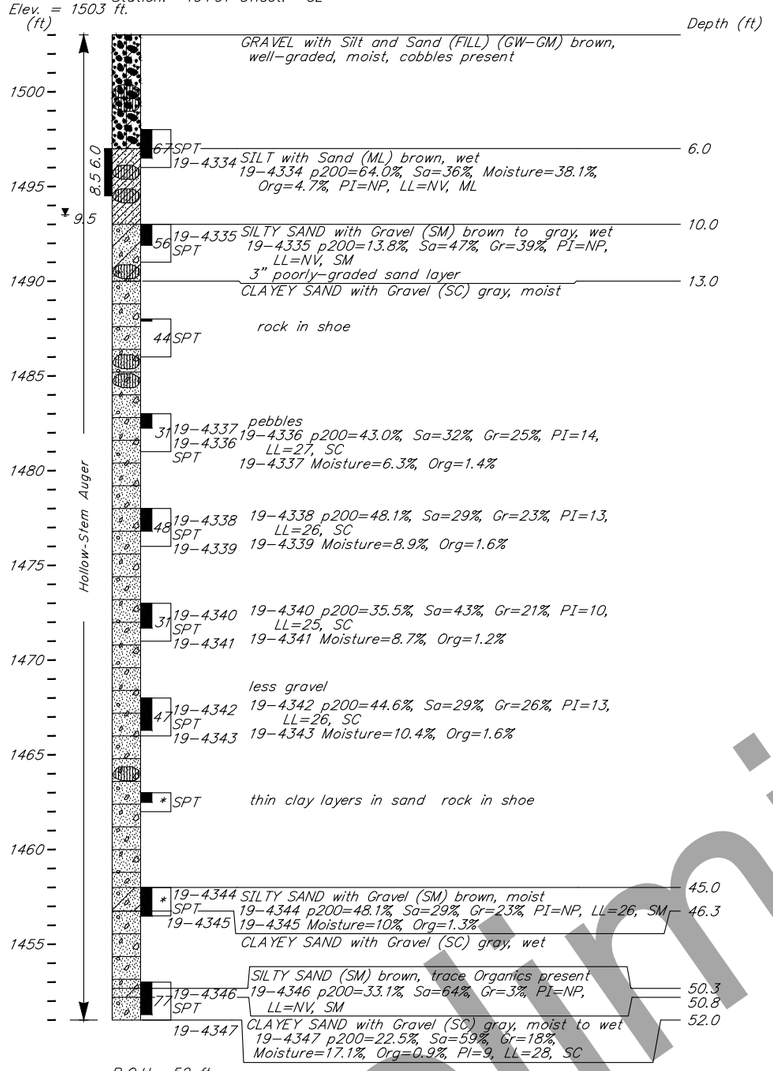

B.O.H. 52 ft.
Hammer: CME Auto Hammer 140 lb hammer
Equipment: CME 850
Drilling Method: 6.5" Hollow Auger
Geologist: J. SIMPSON
Latitude: 61.45544 Longitude: -143.76321

Preliminary Plans

DESIGNED BY: D. Hemstreet	CHECKED: Engineer		
DRAWN BY: R. Angell	CHECKED: J. Nicolazzo		
QUANTITIES BY: Engineer	CHECKED: Engineer		

STATE OF ALASKA
DEPARTMENT OF TRANSPORTATION AND PUBLIC FACILITIES
STATEWIDE MATERIALS

STATE OF ALASKA 49TH
David A. Hemstreet No. CE 9800
REGISTERED PROFESSIONAL ENGINEER

CHOKOSNA RIVER BRIDGE
EDGERTON / MCCARTHY ROAD
TEST HOLE & PENETROMETER LOGS

BRIDGE NO. 1193
DWG. NO. 18

H:\Projects\McCarthy_Rd\NFWHY00125_McCarthy_Rd_MP27_ChokosnaBrdg\Bridge\Drafting\1193_GEO_-6 TH-6 Jan 09, 2020 - 2:26pm